Specification

- multistage centrifugal pump in structured design coupled with **oddesse** submersible motor
- discharge end with integrated non-return valve
- driven by three-phase AC motors
- minimal water level above the pump unit 2 m
- min. cooling flow 0.5 m/s, max. ambient temperature 30 °C (higher temperature on request)
- pure, clean water with content of solid up to 70 mg/l
- standard connection: R = G5
- pipe thread according to DIN ISO 228 part 1 / other connections on request
- hydraulic performance tests for acceptance according to DIN EN ISO 9906 class 2
- special design (Horizontal installation, etc.) on request

Main dimensions

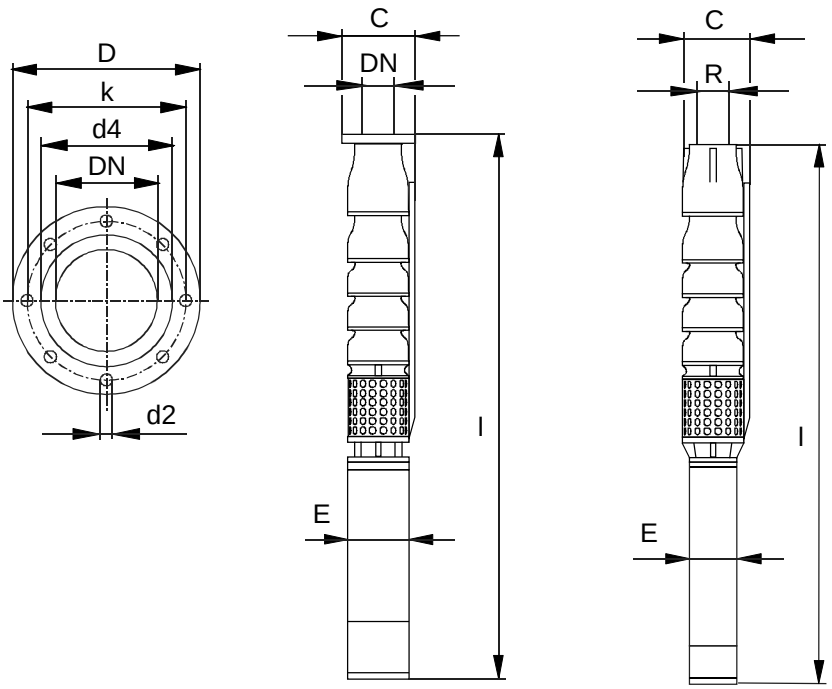

C = 198 mm for 1 cable
C = 206 mm for 2 cables
C = flange see table below

E = 141 mm for po-mo6
E = 181 mm for po-mo8

Dimensions of adapters

Type	reduction thread	adapters						
		flange	dimensions					
			D [mm]	b [mm]	k [mm]	d4 [mm]	d2 [mm]	m [kg]
po-ss-63/8.3 po-ss-85/8.3 po-ss-100/8.3 po-ss-140/8.3	G4 G5 G6	DN80, PN16	200	20	160	138	8× ø18	4.7
		DN80, PN40	200	24	160	138	8× ø18	5.7
		DN100, PN16	220	20	180	158	8× ø18	6.1
		DN100, PN40	235	24	190	162	8× ø22	8.0
		DN125, PN16	250	22	210	188	8× ø18	8.2
		DN125, PN40	270	26	220	188	8× ø26	11.0
		DN150, PN16	285	22	240	212	8× ø22	18.0

Flange dimensions according to DIN 2633 (PN16) and DIN 2635 (PN40)
Material: stainless steel
PN nominal pressure [bar], DN nominal diameter [mm], b thickness of flange [mm], m weight [kg]
Flanges with 2 cable recesses

subject to alterations

oddesse Pumpen- und Motorenfabrik GmbH • Am Pappelwald 12 • D-39387 Oschersleben - Made in Germany -
Phone: +49 (0) 3949 932 467 • Fax: +49 (0) 3949 932 463 • eMail: info@oddesse.de • http://www.oddesse.de

Material of construction (hydraulic parts in casted design)

Submersible motor pumps po-ss/8.3

According to DIN

components	N-version (AISI 316)
impeller	stainless steel / 1.4401
spacer sleeve	stainless steel / 1.4401
stage casing, diffuser	stainless steel / 1.4401
wear ring	POM
suction casing, outlet branch	stainless steel / 1.4401
radial bearing	PTFE / stainless steel
suction strainer	stainless steel / 1.4401
coupling	stainless steel / 1.4462
shaft	stainless steel / 1.4462
screws, nuts and bolts	stainless steel / 1.4401
motor	see chapter submersible motors

According to AISI

components	N-version (AISI 316)
impeller	stainless steel / AISI 316
spacer sleeve	stainless steel / AISI 316
stage casing, diffuser	stainless steel / AISI 316
wear ring	POM
suction casing, outlet branch	stainless steel / AISI 316
radial bearing	PTFE / stainless steel
suction strainer	stainless steel / AISI 316
coupling	stainless steel / AISI 329
shaft	stainless steel / AISI 329
screws, nuts and bolts	stainless steel / AISI 316
motor	see chapter submersible motors

oddesse reserve the right to employ construction materials following German (DIN) standard

subject to alterations

po-ss-63/8.3

2850 1/min - 50 Hz

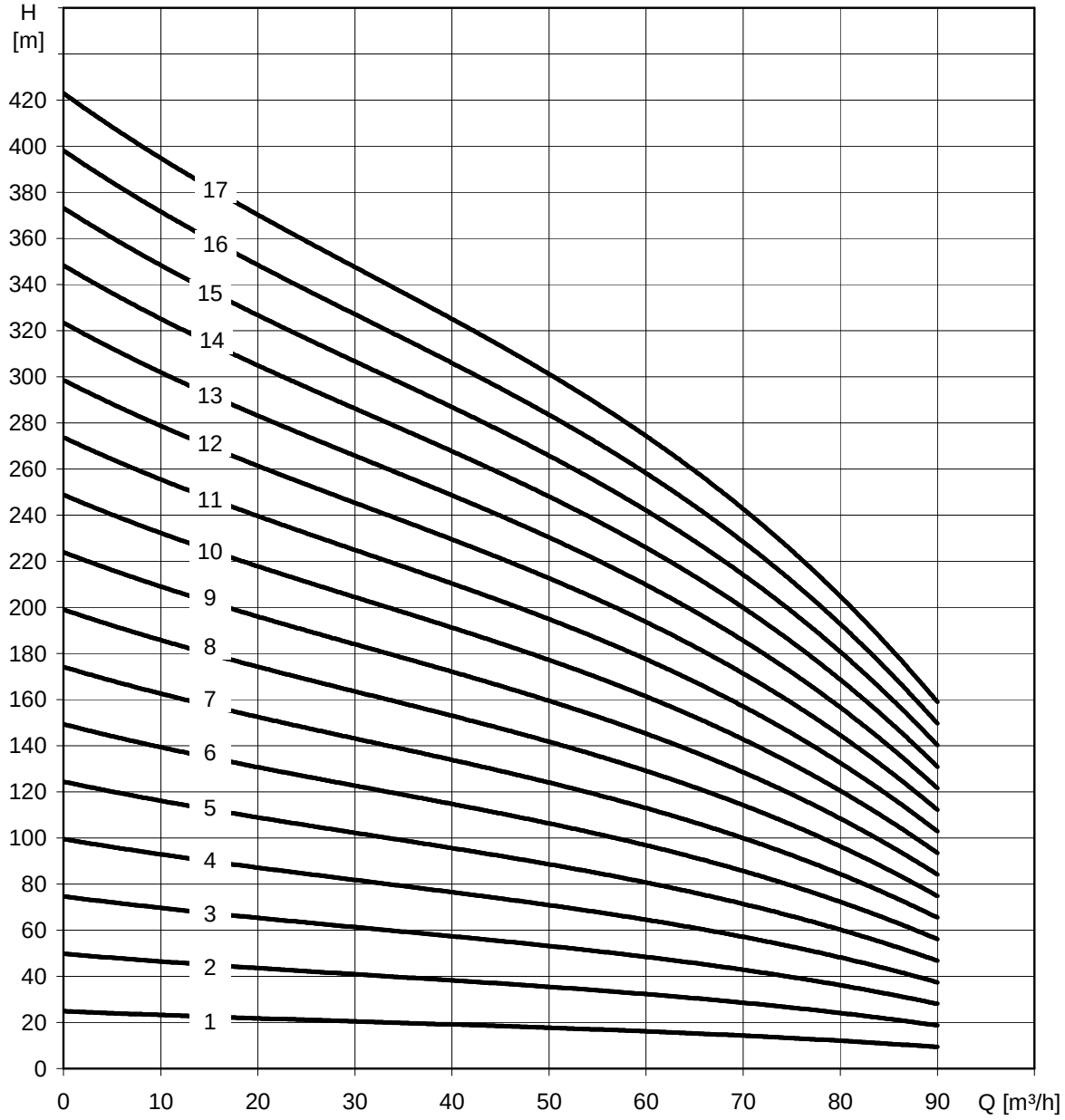

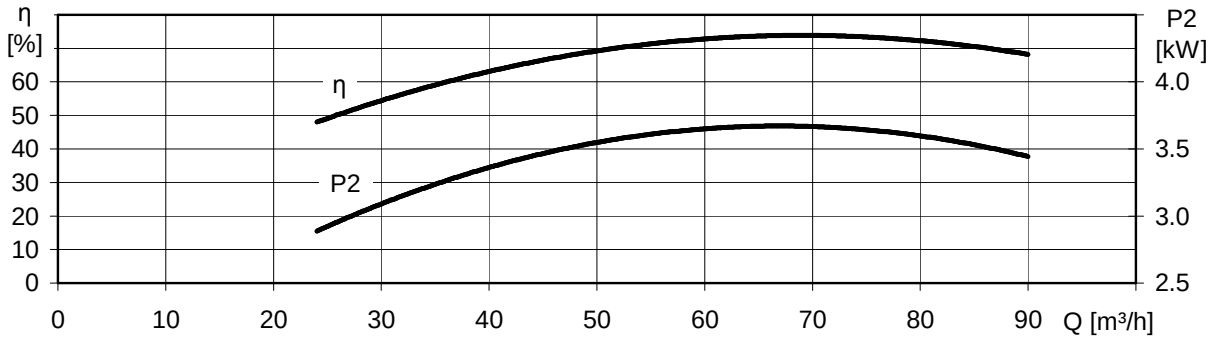

subject to alterations

po-ss-63/8.3

2850 1/min - 50 Hz

Type	Power		Amperes	Delivery rate Q									Length	Weight
			400V	[l/s]	7	10	15	**18**	20	22	23	25	l	m
	[kW]	[HP]	[A]	[m³/h]	24	36	54	**63**	72	78	84	90	[mm]	[kg]
po-ss-63- 1/8.3	4*	5.5*	10	**Delivery head H [m]**	21	20	17	**16**	14	13	11	9	1205	63
po-ss-63- 2/8.3	7.5*	10*	17		43	39	34	**31**	28	25	22	19	1416	78
po-ss-63- 3/8.3	13*	17.5*	29		64	59	51	**47**	42	38	33	28	1712	102
po-ss-63- 4/8.3	15*	20*	32		85	79	69	**63**	56	50	44	38	1898	115
po-ss-63- 5/8.3	22	30	45		106	98	86	**78**	69	63	55	47	2087	162
po-ss-63- 6/8.3	30	40	58		128	118	103	**94**	83	75	66	56	2318	185
po-ss-63- 7/8.3	30	40	58		149	137	120	**109**	97	88	77	66	2454	193
po-ss-63- 8/8.3	30	40	58		170	157	137	**125**	111	100	88	75	2590	201
po-ss-63- 9/8.3	37	50	72		191	177	154	**141**	125	113	99	84	2811	222
po-ss-63-10/8.3	45	60	88		213	196	171	**156**	139	125	110	94	3027	243
po-ss-63-11/8.3	45	60	88		234	216	188	**172**	153	138	121	103	3163	251
po-ss-63-12/8.3	45	60	88		255	236	206	**188**	167	150	132	113	3299	259
po-ss-63-13/8.3	55	75	108		276	255	223	**203**	180	163	143	122	3515	278
po-ss-63-14/8.3	55	75	108		298	275	240	**219**	194	175	154	131	3651	286
po-ss-63-15/8.3	63	85	127		319	294	257	**234**	208	188	165	141	3867	307
po-ss-63-16/8.3	63	85	127		340	314	274	**250**	222	200	176	150	4003	315
po-ss-63-17/8.3	75	100	145		361	334	291	**266**	236	213	187	159	4239	338

* 6 inch motor

subject to alterations

oddesse Pumpen- und Motorenfabrik GmbH • Am Pappelwald 12 • D-39387 Oschersleben - Made in Germany -
Phone: +49 (0) 3949 932 467 • Fax: +49 (0) 3949 932 463 • eMail: info@oddesse.de • http://www.oddesse.de

po-ss-85/8.3

2850 1/min - 50 Hz

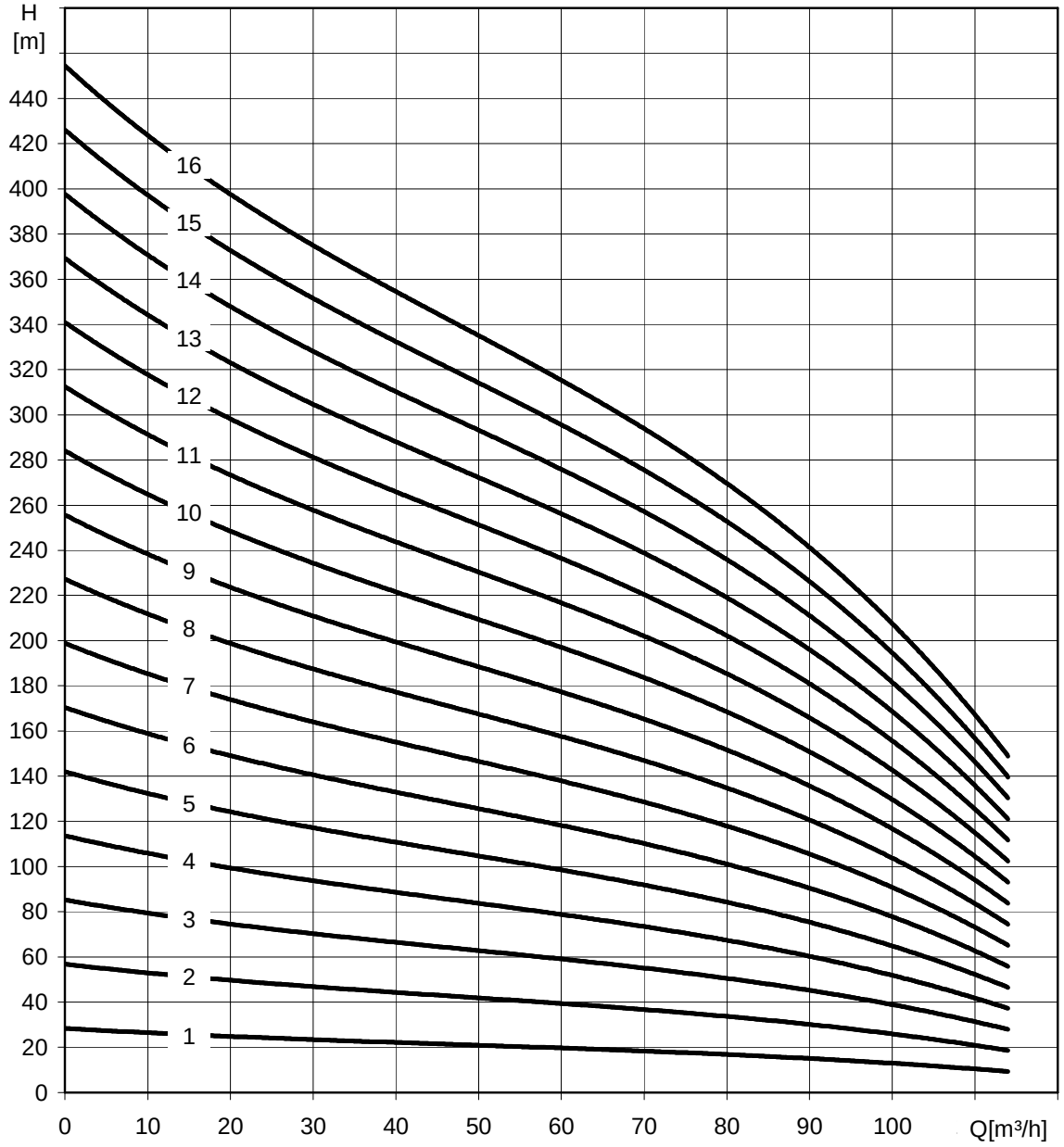

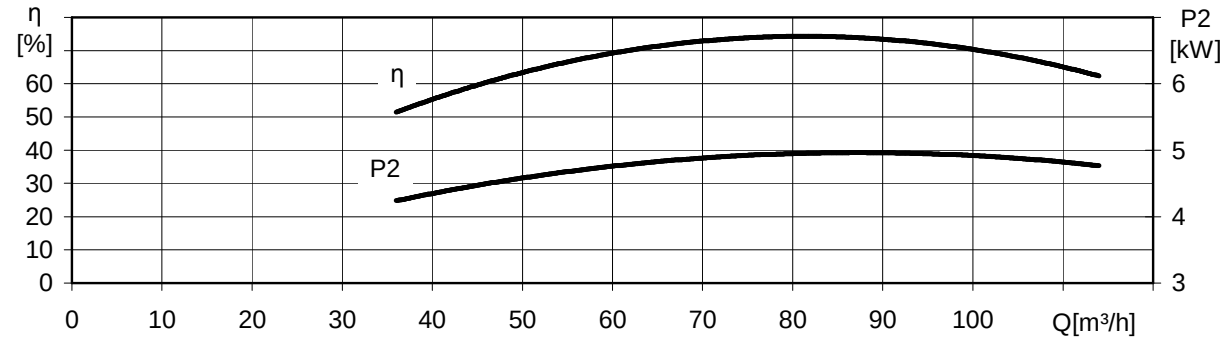

subject to alterations

oddesse Pumpen- und Motorenfabrik GmbH • Am Pappelwald 12 • D-39387 Oschersleben - Made in Germany -
Phone: +49 (0) 3949 932 467 • Fax: +49 (0) 3949 932 463 • eMail: info@oddesse.de • http://www.oddesse.de

po-ss-85/8.3

2850 1/min - 50 Hz

Type	Power		Amperes	Delivery rate Q									Length	Weight
			400V	[l/s]	10	15	18	22	**24**	25	28	32	l	m
	[kW]	[HP]	[A]	[m³/h]	36	54	66	78	**85**	90	102	114	[mm]	[kg]
po-ss-85- 1/8.3	5.5*	7.5*	12	**Delivery head H [m]**	23	20	19	17	**16**	15	13	9	1248	67
po-ss-85- 2/8.3	11*	15*	24		45	41	38	34	**32**	30	25	19	1541	90
po-ss-85- 3/8.3	18.5*	25*	40		68	61	57	52	**48**	45	38	28	1827	114
po-ss-85- 4/8.3	22	30	45		91	82	76	69	**64**	60	50	37	1951	154
po-ss-85- 5/8.3	30	40	58		114	102	95	86	**80**	76	63	47	2182	176
po-ss-85- 6/8.3	37	50	72		136	122	113	103	**96**	91	75	56	2403	198
po-ss-85- 7/8.3	37	50	72		159	143	132	120	**112**	106	88	65	2539	206
po-ss-85- 8/8.3	45	60	88		182	163	151	138	**128**	121	100	74	2755	227
po-ss-85- 9/8.3	55	75	108		204	184	170	155	**144**	136	113	84	2971	246
po-ss-85-10/8.3	55	75	108		227	204	189	172	**160**	151	125	93	3107	254
po-ss-85-11/8.3	63	85	127		250	224	208	189	**176**	166	138	102	3323	275
po-ss-85-12/8.3	63	85	127		272	245	227	206	**192**	181	150	112	3459	283
po-ss-85-13/8.3	75	100	145		295	265	246	224	**208**	196	163	121	3695	306
po-ss-85-14/8.3	75	100	145		318	286	265	241	**224**	211	175	130	3831	314
po-ss-85-15/8.3	90	125	172		341	306	284	258	**240**	227	188	140	4027	332
po-ss-85-16/8.3	90	125	172		363	326	302	275	**256**	242	200	149	4163	340

* 6 inch motor

subject to alterations

oddesse Pumpen- und Motorenfabrik GmbH • Am Pappelwald 12 • D-39387 Oschersleben - Made in Germany -
Phone: +49 (0) 3949 932 467 • Fax: +49 (0) 3949 932 463 • eMail: info@oddesse.de • http://www.oddesse.de

po-ss-100/8.3

2850 1/min - 50 Hz

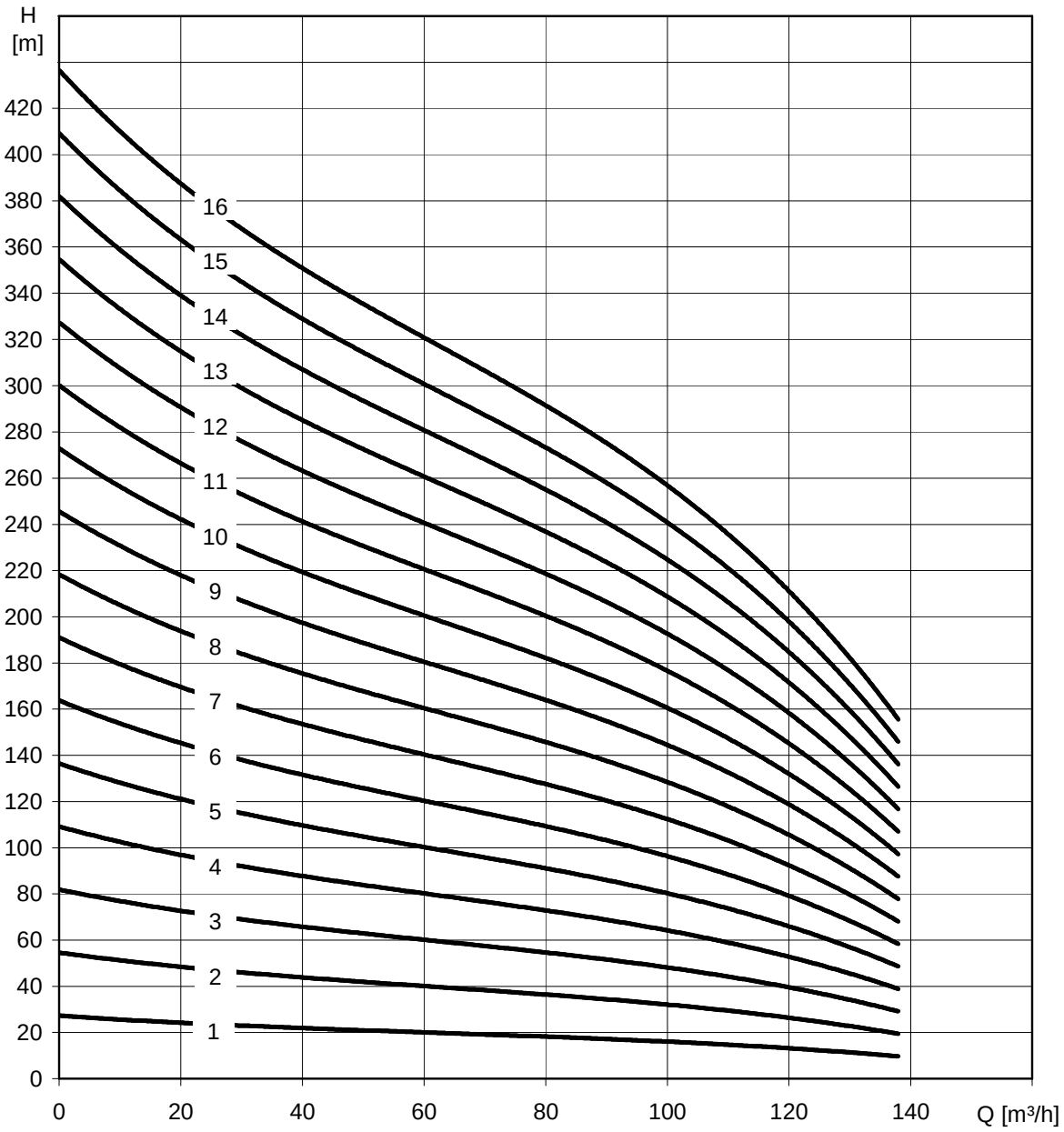

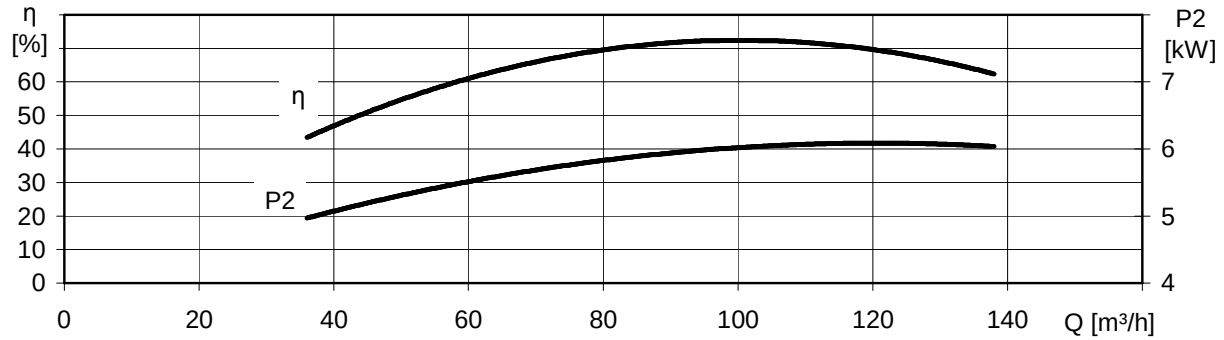

subject to alterations

po-ss-100/8.3

2850 1/min - 50 Hz

Type	Power		Amperes	Delivery rate Q									Length	Weight
			400V	[l/s]	10	18	25	**28**	32	33	35	38	l	m
	[kW]	[HP]	[A]	[m³/h]	36	66	90	**100**	114	120	126	138	[mm]	[kg]
po-ss-100- 1/8.3	7.5*	10*	17	Delivery head H [m]	22	20	17	**16**	14	13	12	10	1280	71
po-ss-100- 2/8.3	13*	17.5*	29		45	39	35	**32**	28	26	24	20	1576	94
po-ss-100- 3/8.3	22	30	45		67	59	52	**48**	42	39	36	29	1815	148
po-ss-100- 4/8.3	30	40	58		89	78	69	**64**	56	52	48	39	2046	171
po-ss-100- 5/8.3	37	50	72		112	98	87	**81**	71	66	61	49	2267	192
po-ss-100- 6/8.3	45	60	88		134	117	104	**97**	85	79	73	59	2483	213
po-ss-100- 7/8.3	45	60	88		156	137	121	**113**	99	92	85	69	2619	221
po-ss-100- 8/8.3	55	75	108		178	156	138	**129**	113	105	97	78	2835	241
po-ss-100- 9/8.3	63	85	127		201	176	156	**145**	127	118	109	88	3051	261
po-ss-100-10/8.3	63	85	127		223	195	173	**161**	141	131	121	98	3187	269
po-ss-100-11/8.3	75	100	145		245	215	190	**177**	155	144	133	108	3423	293
po-ss-100-12/8.3	75	100	145		268	234	208	**193**	169	157	145	118	3559	301
po-ss-100-13/8.3	90	125	172		290	254	225	**209**	183	170	157	127	3755	318
po-ss-100-14/8.3	90	125	172		312	273	242	**225**	197	183	169	137	3891	326
po-ss-100-15/8.3	110	150	225		335	293	260	**242**	212	197	182	147	4077	342
po-ss-100-16/8.3	110	150	225		357	312	277	**258**	226	210	194	157	4213	350

* 6 inch motor

subject to alterations

oddesse Pumpen- und Motorenfabrik GmbH • Am Pappelwald 12 • D-39387 Oschersleben - Made in Germany -
Phone: +49 (0) 3949 932 467 • Fax: +49 (0) 3949 932 463 • eMail: info@oddesse.de • http://www.oddesse.de

po-ss-140/8.3

2850 1/min - 50 Hz

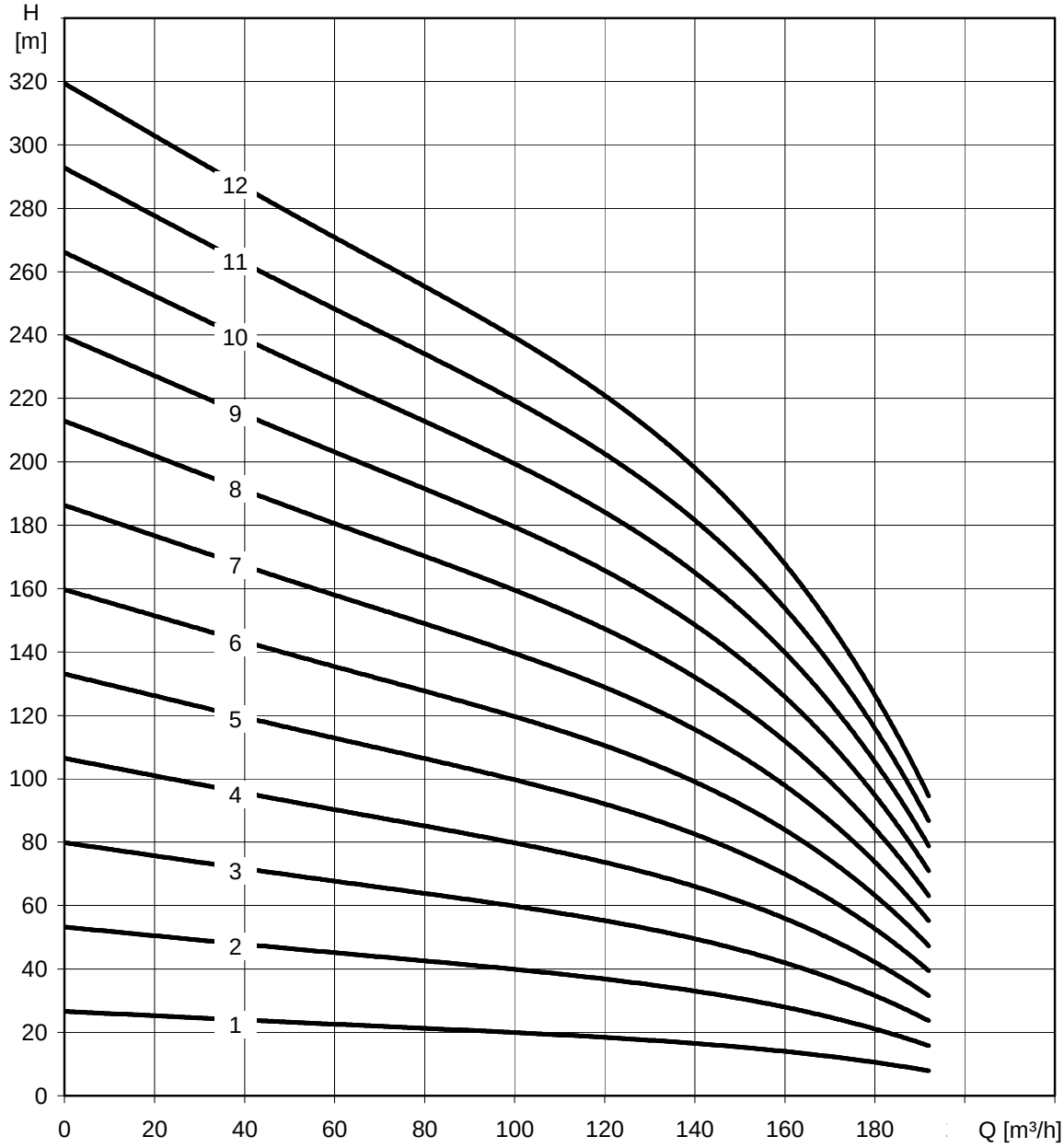

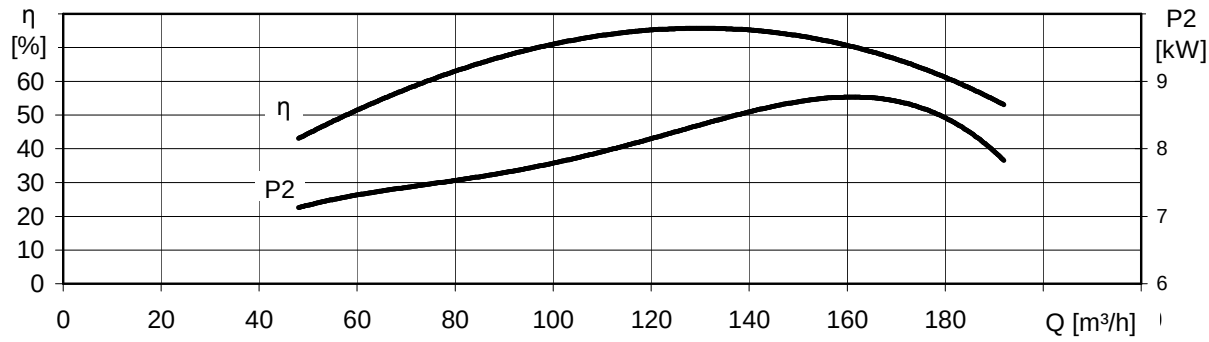

subject to alterations

oddesse Pumpen- und Motorenfabrik GmbH • Am Pappelwald 12 • D-39387 Oschersleben - Made in Germany -
Phone: +49 (0) 3949 932 467 • Fax: +49 (0) 3949 932 463 • eMail: info@oddesse.de • http://www.oddesse.de

po-ss-140/8.3

2850 1/min - 50 Hz

Type	Power		Amperes	Delivery rate Q									Length	Weight
			400V	[l/s]	13	27	33	**39**	43	47	50	53	l	m
	[kW]	[HP]	[A]	[m³/h]	48	96	120	**140**	156	168	180	192	[mm]	[kg]
po-ss-140- 1/8.3	9.2*	12.5*	21	**Delivery head H [m]**	23	20	18	**17**	15	13	10	8	1320	75
po-ss-140- 2/8.3	18.5*	25*	40		47	40	37	**33**	30	25	21	16	1691	106
po-ss-140- 3/8.3	30	40	58		70	60	55	**50**	44	38	31	24	1910	162
po-ss-140- 4/8.3	37	50	72		94	80	74	**66**	59	50	42	32	2131	183
po-ss-140- 5/8.3	45	60	88		117	101	92	**83**	74	63	52	40	2347	203
po-ss-140- 6/8.3	55	75	108		140	121	110	**100**	89	75	62	48	2563	223
po-ss-140- 7/8.3	63	85	127		164	141	129	**116**	104	88	73	56	2779	243
po-ss-140- 8/8.3	75	100	145		187	161	147	**133**	118	100	83	64	3015	266
po-ss-140- 9/8.3	90	125	172		211	181	166	**149**	133	113	94	72	3211	284
po-ss-140-10/8.3	110	150	225		234	201	184	**166**	148	125	104	80	3397	299
po-ss-140-11/8.3	110	150	225		257	221	202	**183**	163	138	114	88	3533	307
po-ss-140-12/8.3	110	150	225		281	241	221	**199**	178	150	125	96	3669	314

* 6 inch motor

subject to alterations

oddesse Pumpen- und Motorenfabrik GmbH • Am Pappelwald 12 • D-39387 Oschersleben - Made in Germany -
Phone: +49 (0) 3949 932 467 • Fax: +49 (0) 3949 932 463 • eMail: info@oddesse.de • http://www.oddesse.de

Specification

- multistage centrifugal pump in jacked design coupled with **oddesse** submersible motor
- discharge end with integrated non-return valve
- driven by three-phase AC motors
- minimal water level above the pump unit 2 m
- min. cooling flow 0.5 m/s, max. ambient temperature 30 °C (higher temperature on request)
- pure, clean water with content of solid up to 100 mg/l
- standard connection: R = G5
- pipe thread according to DIN ISO 228 part 1
- optional G4 and NPT 5”-thread on request
- other connections on request
- hydraulic performance tests for acceptance according to DIN EN ISO 9906 class 2
- special design (Horizontal installation, etc.) on request

Main dimensions

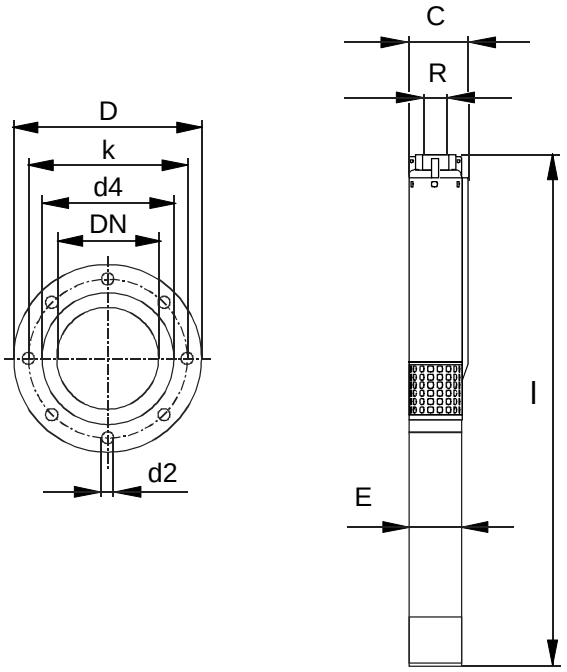

C = 195 mm for 1 cable
C = 197 mm for 2 cable

E = 141 mm for po-mo6
E = 181 mm for po-mo8

Dimensions of adapters

Type	reduction thread	adapters						
		thread ⇒ flange	dimensions					
			D [mm]	b [mm]	k [mm]	d4 [mm]	d2 [mm]	m [kg]
po-ss-78/8.4 po-ss-97/8.4	G5 ⇒ G4	G5 ⇒ DN100, PN16	220	20	180	158	8× ø18	6.1
		G5 ⇒ DN100, PN40	235	24	190	162	8× ø22	8.0
		G5 ⇒ DN125, PN16	250	22	210	188	8× ø18	8.2
		G5 ⇒ DN125, PN40	270	26	220	188	8× ø26	11.0

Flange dimensions according to DIN 2633 (PN16) and DIN 2635 (PN40)
Material: stainless steel
PN nominal pressure [bar], DN nominal diameter [mm], b thickness of flange [mm], m weight [kg]
Flanges with 2 cable recesses

subject to alterations

Material of construction

Submersible motor pumps po-ss/8.4

According to DIN

components	**design**	
	standard version (AISI 304)	**N-version (AISI 316)**
impeller	stainless steel / 1.4401	
stage casing, diffuser	stainless steel / 1.4301	stainless steel / 1.4401
suction casing, outlet branch	stainless steel / 1.4301	stainless steel / 1.4401
radial bearing	NBR / WC (Widia)	
external casing	stainless steel / 1.4301	stainless steel / 1.4401
suction strainer	stainless steel / 1.4401	
coupling	stainless steel / 1.4057 / 1.4460	stainless steel / 1.4401 / 1.4460
shaft	stainless steel / 1.4057	
screws, nuts and bolts	stainless steel / 1.4401	
motor	see chapter submersible motors	

According to AISI

components	**design**	
	standard version (AISI 304)	**N-version (AISI 316)**
impeller	stainless steel / AISI 316	
stage casing, diffuser	stainless steel / AISI 304	stainless steel / AISI 316
suction casing, outlet branch	stainless steel / AISI 304	stainless steel / AISI 316
radial bearing	NBR / WC (Widia)	
external casing	stainless steel / AISI 304	stainless steel / AISI 316
suction strainer	stainless steel / AISI 316	
coupling	stainless steel / AISI 431 / 329	stainless steel / AISI 316 / 329
shaft	stainless steel / AISI 431	
screws, nuts and bolts	stainless steel / AISI 316	
motor	see chapter submersible motors	

oddesse reserve the right to employ construction materials following German (DIN) standard

subject to alterations

po-ss-78/8.4

2850 1/min - 50 Hz

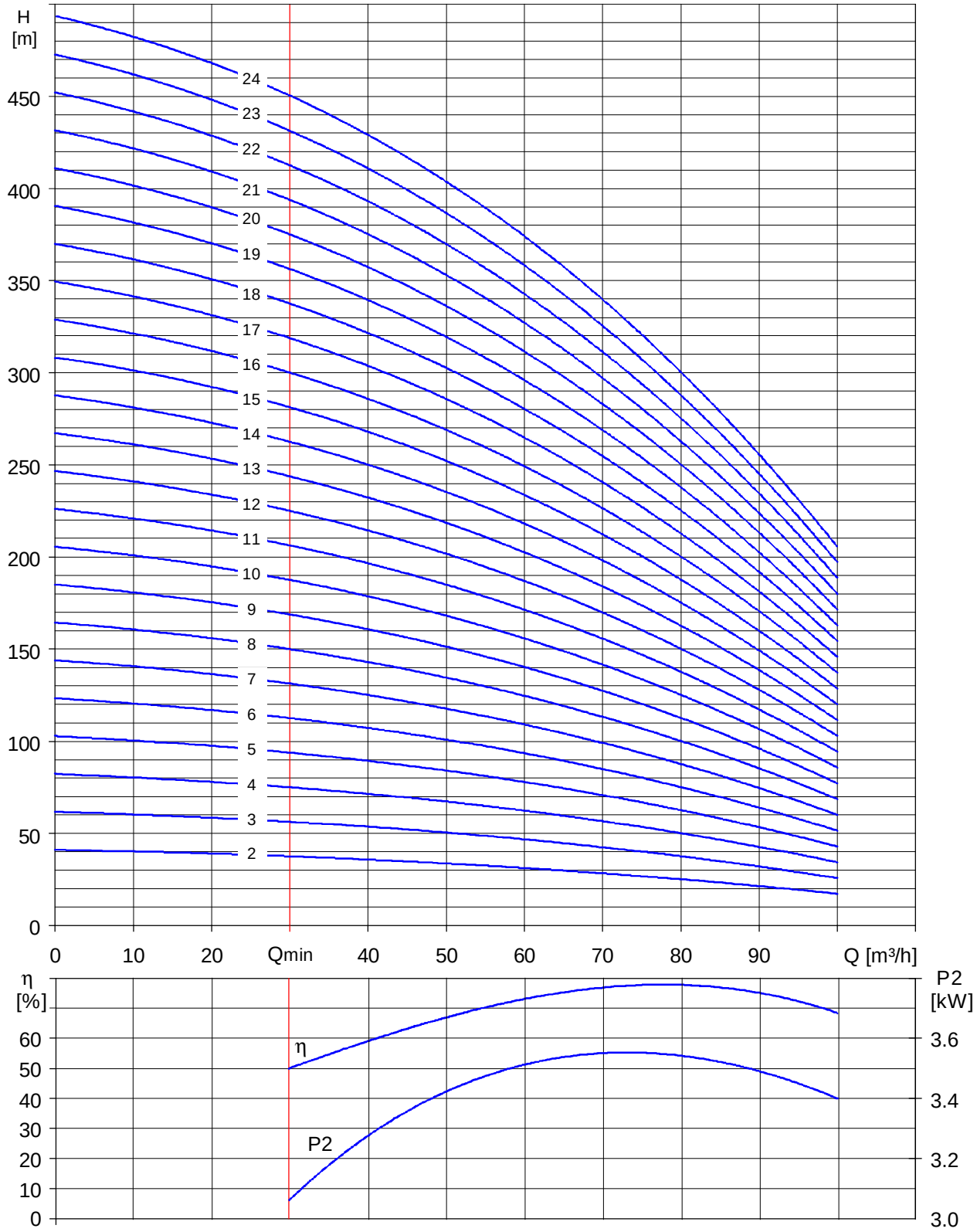

subject to alterations

po-ss-78/8.4

2850 1/min - 50 Hz

Type	Power		Amperes	Delivery rate Q									Length	Weight
			400V	[l/s]	8.3	11.1	13.9	16.7	19.4	**21.7**	25.0	27.8	l	m
	[kW]	[HP]	[A]	[m³/h]	30	40	50	60	70	**78**	90	100	[mm]	[kg]
po-ss-78- 2/8.4	7.5*	10	17	**Delivery head H [m]**	38	36	34	31	28	**26**	21	17	1373	80
po-ss-78- 3/8.4	11*	15	24		56	54	51	47	42	**39**	32	26	1624	97
po-ss-78- 4/8.4	15*	20	32		75	72	67	62	57	**52**	43	34	1835	111
po-ss-78- 5/8.4	18.5*	25	40		94	89	84	78	71	**64**	54	43	2026	123
po-ss-78- 6/8.4	22	30	45		113	107	101	93	85	**77**	64	51	2145	160
po-ss-78- 7/8.4	30	40	58		131	125	118	109	99	**90**	75	60	2366	180
po-ss-78- 8/8.4	30	40	58		150	143	135	124	113	**103**	86	68	2492	185
po-ss-78- 9/8.4	37	50	72		169	161	152	140	127	**116**	96	77	2703	204
po-ss-78-10/8.4	37	50	72		188	179	169	155	142	**129**	107	86	2829	209
po-ss-78-11/8.4	45	60	88		206	197	185	171	156	**142**	118	94	3035	227
po-ss-78-12/8.4	45	60	88		225	215	202	186	170	**155**	128	103	3161	232
po-ss-78-13/8.4	55	75	108		244	232	219	202	184	**167**	139	111	3367	249
po-ss-78-14/8.4	55	75	108		263	250	236	217	198	**180**	150	120	3493	254
po-ss-78-15/8.4	55	75	108		281	268	253	233	212	**193**	161	128	3619	259
po-ss-78-16/8.4	63	85	127		300	286	270	248	226	**206**	171	137	3825	277
po-ss-78-17/8.4	63	85	127		319	304	286	264	241	**219**	182	145	3951	282
po-ss-78-18/8.4	75	100	145		338	322	303	279	255	**232**	193	154	4177	303
po-ss-78-19/8.4	75	100	145		356	340	320	295	269	**245**	203	162	4303	308
po-ss-78-20/8.4	75	100	145		375	358	337	310	283	**258**	214	171	4429	312
po-ss-78-21/8.4	90	125	172		394	375	354	326	297	**270**	225	180	4615	327
po-ss-78-22/8.4	90	125	172		413	393	371	341	311	**283**	235	188	4741	332
po-ss-78-23/8.4	90	125	172		431	411	388	357	325	**296**	246	197	4867	337
po-ss-78-24/8.4	90	125	172		450	429	404	372	340	**309**	257	205	4993	342

* 6 inch motor

subject to alterations

oddesse Pumpen- und Motorenfabrik GmbH • Am Pappelwald 12 • D-39387 Oschersleben - Made in Germany -
Phone: +49 (0) 3949 932 467 • Fax: +49 (0) 3949 932 463 • eMail: info@oddesse.de • http://www.oddesse.de

po-ss-97/8.4

2850 1/min - 50 Hz

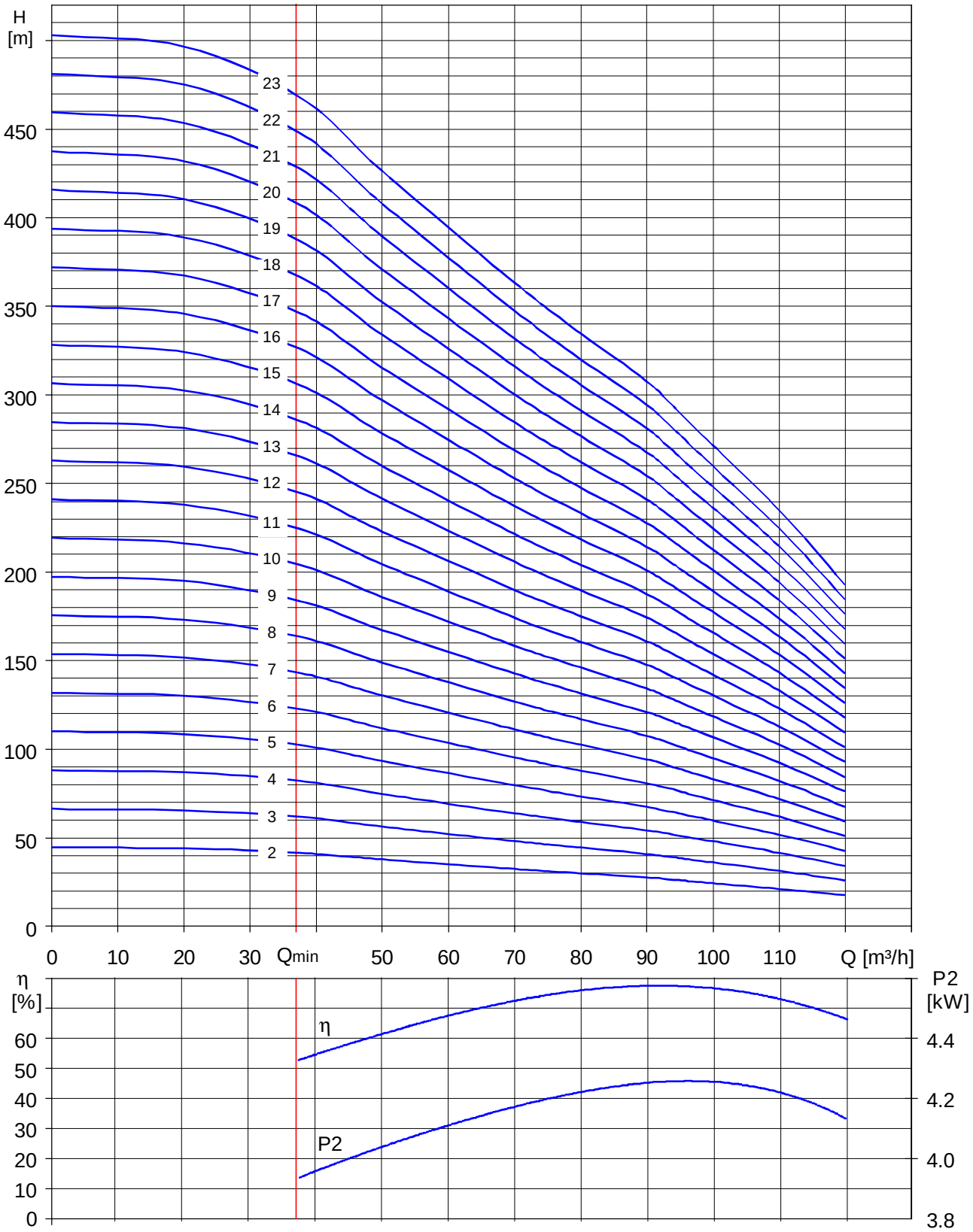

subject to alterations

po-ss-97/8.4

2850 1/min - 50 Hz

Type	Power		Amperes	Delivery rate Q									Length	Weight
			400V	[l/s]	10.4	13.9	19.4	22.2	25.0	**26.9**	30.6	33.3	l	m
	[kW]	[HP]	[A]	[m³/h]	37.5	50	70	80	90	**97**	110	120	[mm]	[kg]
po-ss-97- 2/8.4	9.2*	12.5	21	Delivery head H [m]	41	37	32	29	27	**25**	20	17	1413	84
po-ss-97- 3/8.4	15*	20	32		61	56	47	44	40	**37**	31	25	1709	106
po-ss-97- 4/8.4	18.5*	25	40		81	74	63	58	53	**49**	41	33	1900	118
po-ss-97- 5/8.4	22	30	45		102	93	79	73	67	**61**	51	42	2019	155
po-ss-97- 6/8.4	30	40	58		122	111	95	87	80	**74**	61	50	2240	175
po-ss-97- 7/8.4	37	50	72		142	130	110	102	93	**86**	71	59	2451	194
po-ss-97- 8/8.4	37	50	72		163	148	126	116	107	**98**	82	67	2577	199
po-ss-97- 9/8.4	45	60	88		183	167	142	131	120	**110**	92	75	2783	217
po-ss-97-10/8.4	45	60	88		203	185	158	145	133	**123**	102	84	2909	222
po-ss-97-11/8.4	55	75	108		224	204	173	160	147	**135**	112	92	3115	239
po-ss-97-12/8.4	55	75	108		244	222	189	174	160	**147**	122	100	3241	244
po-ss-97-13/8.4	63	85	127		264	241	205	189	174	**159**	132	109	3447	262
po-ss-97-14/8.4	63	85	127		284	259	221	203	187	**172**	143	117	3573	267
po-ss-97-15/8.4	75	100	145		305	278	236	218	200	**184**	153	126	3799	288
po-ss-97-16/8.4	75	100	145		325	296	252	232	214	**196**	163	134	3925	293
po-ss-97-17/8.4	75	100	145		345	315	268	247	227	**208**	173	142	4051	298
po-ss-97-18/8.4	90	125	172		366	333	284	261	240	**221**	183	151	4237	313
po-ss-97-19/8.4	90	125	172		386	352	299	276	254	**233**	194	159	4363	318
po-ss-97-20/8.4	90	125	172		406	370	315	290	267	**245**	204	167	4489	322
po-ss-97-21/8.4	110	150	225		427	389	331	305	280	**257**	214	176	4665	335
po-ss-97-22/8.4	110	150	225		447	407	347	319	294	**270**	224	184	4791	340
po-ss-97-23/8.4	110	150	225		467	426	362	334	307	**282**	234	193	4917	345

* 6 inch motor

subject to alterations

oddesse Pumpen- und Motorenfabrik GmbH • Am Pappelwald 12 • D-39387 Oschersleben - Made in Germany -
Phone: +49 (0) 3949 932 467 • Fax: +49 (0) 3949 932 463 • eMail: info@oddesse.de • http://www.oddesse.de

Specification

- multistage centrifugal pump in structured design coupled with **oddesse** submersible motor
- discharge end with integrated non-return valve
- driven by three-phase AC motors
- minimal water level above the pump unit 1 m
- min. cooling flow 0.5 m/s, max. ambient temperature 30 °C (higher temperature on request)
- pure, clean water with content of solid up to 100 mg/l
- standard connection: R = G5
- pipe thread according to DIN ISO 228 part 1 / other connections on request
- hydraulic performance tests for acceptance according to DIN EN ISO 9906 class 2
- special design (Horizontal installation, etc.) on request

Main dimensions

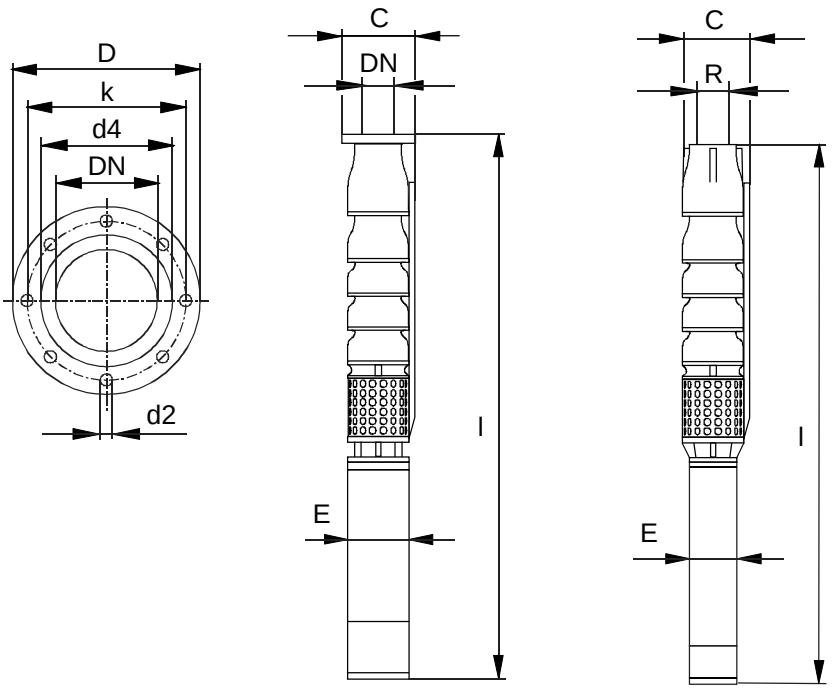

C = 198 mm for 1 cable
C = 206 mm for 2 cables
C = flange see table below

E = 141 mm for po-mo6
E = 181 mm for po-mo8

Dimensions of adapters

Type	reduction thread	adapters						
		flange	dimensions					
			D [mm]	b [mm]	k [mm]	d4 [mm]	d2 [mm]	m [kg]
po-ss-55/8.6 po-ss-80/8.6 po-ss-100/8.6 po-ss-125/8.6	G4 G5 G6	DN80, PN16	200	20	160	138	8× ø18	4.7
		DN80, PN40	200	24	160	138	8× ø18	5.7
		DN100, PN16	220	20	180	158	8× ø18	6.1
		DN100, PN40	235	24	190	162	8× ø22	8.0
		DN125, PN16	250	22	210	188	8× ø18	8.2
		DN125, PN40	270	26	220	188	8× ø26	11.0
		DN150, PN16	285	22	240	212	8× ø22	18.0

Flange dimensions according to DIN 2633 (PN16) and DIN 2635 (PN40)
Material: stainless steel
PN nominal pressure [bar], DN nominal diameter [mm], b thickness of flange [mm], m weight [kg]
Flanges with 2 cable recesses

subject to alterations

oddesse Pumpen- und Motorenfabrik GmbH • Am Pappelwald 12 • D-39387 Oschersleben - Made in Germany -
Phone: +49 (0) 3949 932 467 • Fax: +49 (0) 3949 932 463 • eMail: info@oddesse.de • http://www.oddesse.de

Material of construction (hydraulic parts in casted design)

Submersible motor pumps po-ss/8.6

According to DIN

components	C-version (AISI 304)	R-version (duplex)
impeller	stainless steel / 1.4308	duplex stainless steel / 1.4517
stage casing, diffuser	stainless steel / 1.4308	duplex stainless steel / 1.4517
wear ring	POM	POM
suction casing, outlet branch	stainless steel / 1.4401	duplex stainless steel / 1.4517
radial bearing	EPDM / stainless steel	EPDM / duplex stainless steel
suction strainer	stainless steel / 1.4301	duplex stainless steel / 1.4534
coupling	stainless steel / 1.4462	duplex stainless steel / 1.4462
shaft	stainless steel / 1.4057	duplex stainless steel / 1.4462
screws, nuts and bolts	stainless steel / A4-70	duplex stainless steel / 1.4462
motor	see chapter submersible motors	see chapter submersible motors

According to AISI

components	C-version (AISI 304)	R-version (duplex)
impeller	stainless steel / AISI 304	duplex stainless steel
stage casing, diffuser	stainless steel / AISI 304	duplex stainless steel
wear ring	POM	POM
suction casing, outlet branch	stainless steel / AISI 304	duplex stainless steel
radial bearing	EPDM / stainless steel	EPDM / duplex stainless steel
suction strainer	stainless steel / AISI 304	duplex stainless steel / AISI 304L
coupling	stainless steel / duplex	duplex stainless steel
shaft	stainless steel / AISI 431	duplex stainless steel
screws, nuts and bolts	stainless steel / AISI 316	duplex stainless steel
motor	see chapter submersible motors	see chapter submersible motors

oddesse reserve the right to employ construction materials following German (DIN) standard

subject to alterations

po-ss-55/8.6

2850 1/min - 50 Hz

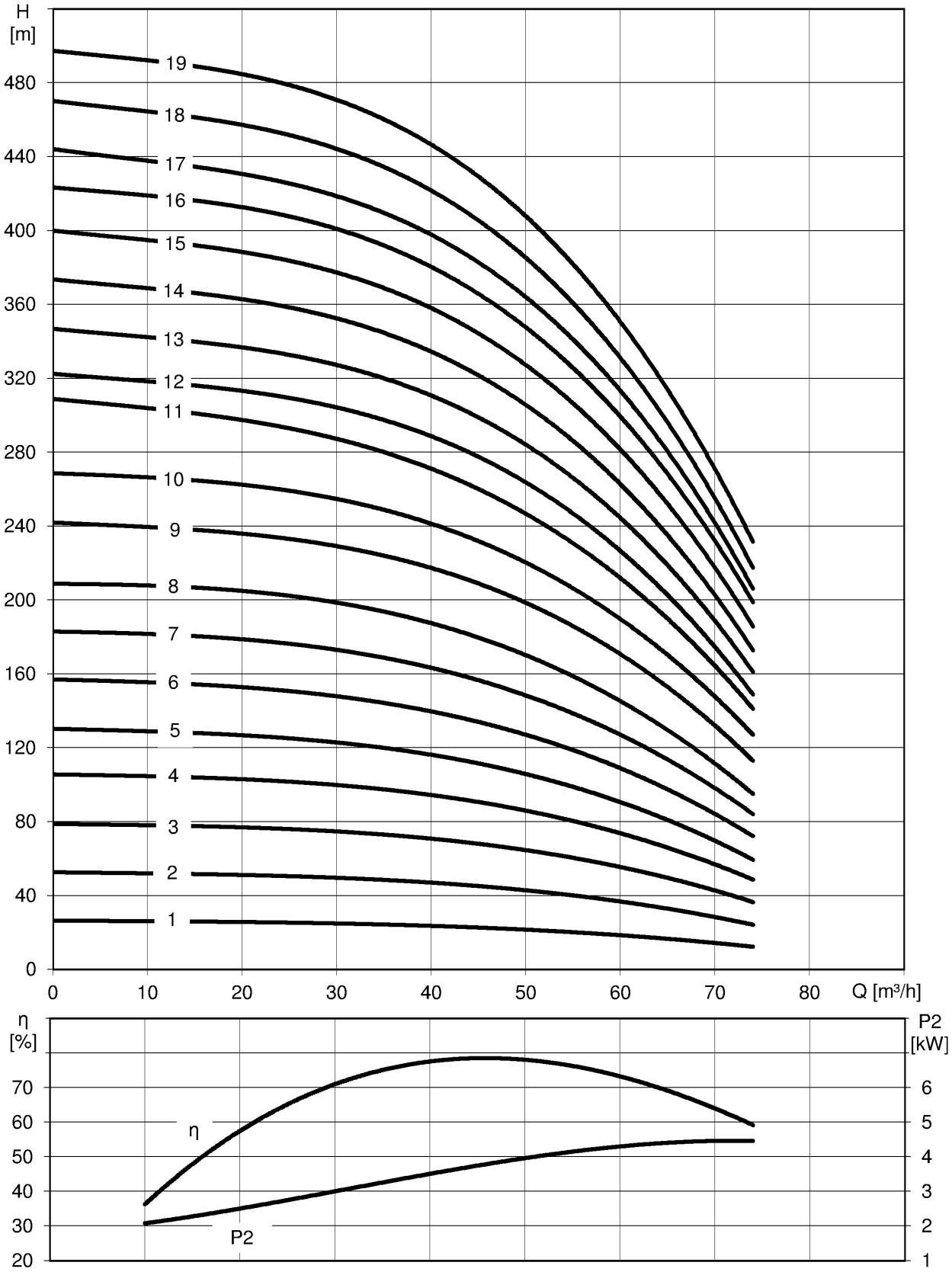

subject to alterations

oddesse Pumpen- und Motorenfabrik GmbH • Am Pappelwald 12 • D-39387 Oschersleben - Made in Germany -
Phone: +49 (0) 3949 932 467 • Fax: +49 (0) 3949 932 463 • eMail: info@oddesse.de • http://www.oddesse.de

po-ss-55/8.6

2850 1/min - 50 Hz

Type	Power		Amperes	Delivery rate Q										Length	Weight
			400V	[l/s]	2.8	5.6	8.3	11.1	13.9	**15.3**	16.7	20.6		l	m
	[kW]	[HP]	[A]	[m³/h]	10	20	30	40	50	**55**	60	74		[mm]	[kg]
po-ss-55- 1/8.6	5.5*	7.5*	12	**Delivery head H [m]**	26	26	25	24	22	**20**	18	12		1257	71
po-ss-55- 2/8.6	9.2*	12.5*	21		52	51	50	48	43	**40**	36	25		1464	87
po-ss-55- 3/8.6	15*	20*	32		78	77	75	72	65	**60**	55	37		1769	113
po-ss-55- 4/8.6	18.5*	25*	40		104	103	100	95	87	**80**	73	49		1969	129
po-ss-55- 5/8.6	26*	35*	57		128	126	124	117	106	**99**	89	60		2249	150
po-ss-55- 6/8.6	30*	40*	64		154	152	149	141	128	**118**	107	73		2494	167
po-ss-55- 7/8.6	37	50	72		180	178	174	165	149	**138**	125	85		2542	216
po-ss-55- 8/8.6	37	50	72		206	204	200	189	171	**158**	143	96		2467	224
po-ss-55- 9/8.6	45	60	88		238	235	230	219	200	**185**	168	114		2892	246
po-ss-55-10/8.6	45	60	88		264	262	256	243	221	**205**	188	128		3027	254
po-ss-55-11/8.6	55	75	108		302	297	288	273	247	**230**	210	142		3242	274
po-ss-55-12/8.6	55	75	108		316	312	306	291	264	**246**	224	150		3377	283
po-ss-55-13/8.6	63	85	127		340	336	329	314	284	**265**	242	162		3592	305
po-ss-55-14/8.6	63	85	127		366	361	354	337	307	**285**	259	174		3727	313
po-ss-55-15/8.6	75	100	145		392	386	380	361	327	**305**	279	187		3962	338
po-ss-55-16/8.6	75	100	145		416	412	404	382	348	**323**	298	200		4097	347
po-ss-55-17/8.6	90	125	172		435	429	421	402	364	**340**	310	208		4292	365
po-ss-55-18/8.6	90	125	172		461	456	446	425	387	**359**	327	219		4427	374
po-ss-55-19/8.6	90	125	172		488	483	473	451	408	**379**	348	233		4562	383

* 6 inch motor

subject to alterations

oddesse Pumpen- und Motorenfabrik GmbH • Am Pappelwald 12 • D-39387 Oschersleben - Made in Germany -
Phone: +49 (0) 3949 932 467 • Fax: +49 (0) 3949 932 463 • eMail: info@oddesse.de • http://www.oddesse.de

po-ss-80/8.6

2850 1/min - 50 Hz

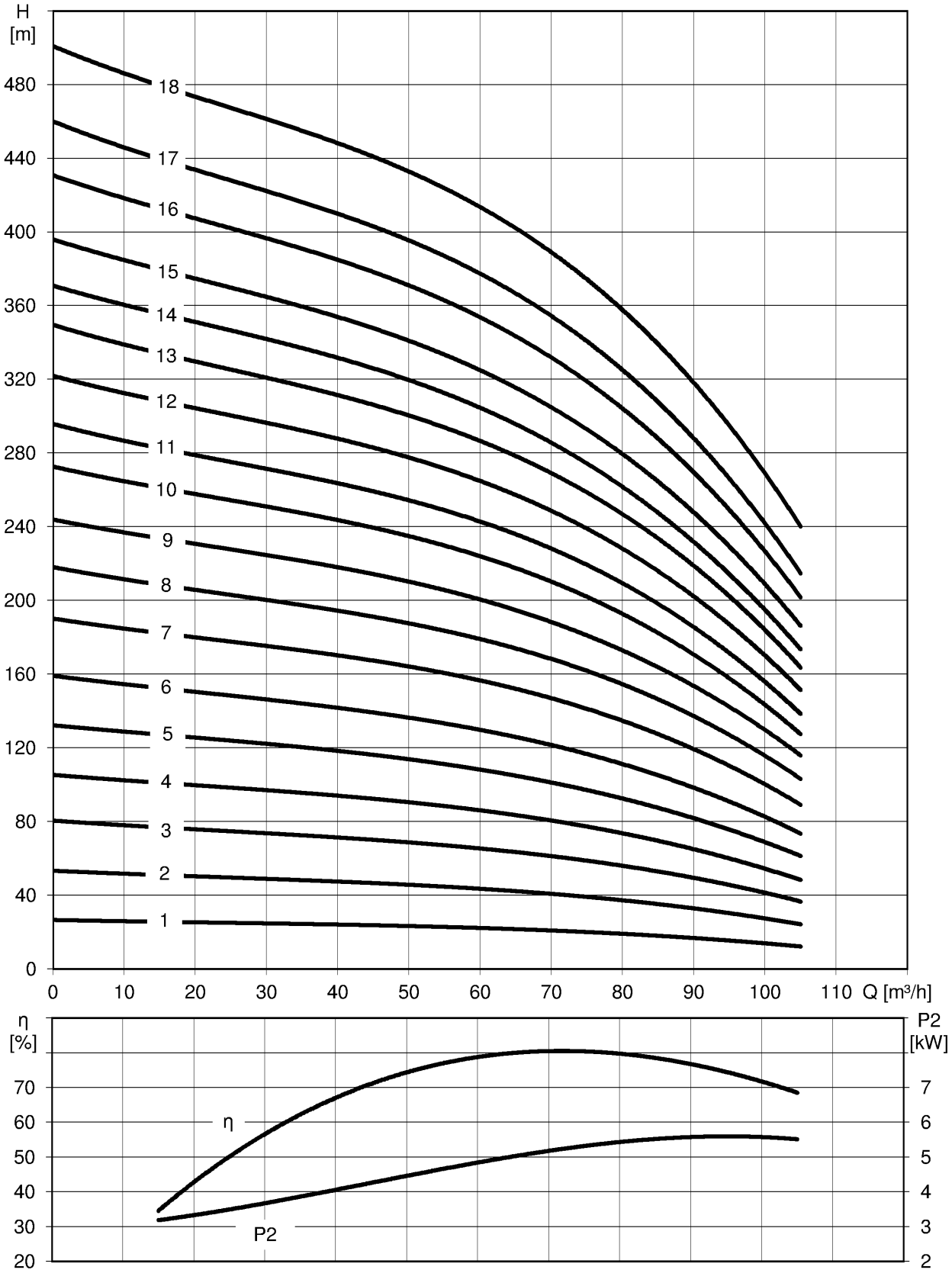

subject to alterations

oddesse Pumpen- und Motorenfabrik GmbH • Am Pappelwald 12 • D-39387 Oschersleben - Made in Germany -
Phone: +49 (0) 3949 932 467 • Fax: +49 (0) 3949 932 463 • eMail: info@oddesse.de • http://www.oddesse.de

po-ss-80/8.6

2850 1/min - 50 Hz

Type	Power		Amperes	Delivery rate Q									Length	Weight
			400V	[l/s]	4.2	8.3	13.9	16.7	19.4	**22.2**	25.0	29.2	l	m
	[kW]	[HP]	[A]	[m³/h]	15	30	50	60	70	**80**	90	105	[mm]	[kg]
po-ss-80- 1/8.6	5.5*	7.5*	12	**Delivery head H [m]**	25	25	23	22	21	**19**	16	13	1274	71
po-ss-80- 2/8.6	11*	15*	24		51	49	46	44	41	**37**	33	25	1583	96
po-ss-80- 3/8.6	18.5*	25*	40		76	74	69	66	61	**56**	49	37	1885	121
po-ss-80- 4/8.6	22*	30*	48		100	97	91	87	81	**73**	64	49	2112	138
po-ss-80- 5/8.6	30*	40	64		126	122	115	109	101	**92**	81	62	2444	161
po-ss-80- 6/8.6	37	50	72		152	146	137	130	122	**111**	98	74	2509	210
po-ss-80- 7/8.6	45	60	88		181	175	165	158	147	**134**	118	90	2741	232
po-ss-80- 8/8.6	45	60	88		207	200	189	180	168	**154**	136	104	2893	241
po-ss-80- 9/8.6	55	75	108		232	224	212	202	188	**172**	152	117	3125	262
po-ss-80-10/8.6	55	75	108		259	250	237	226	210	**192**	168	129	3277	271
po-ss-80-11/8.6	63	85	127		281	271	255	244	229	**208**	184	140	3509	294
po-ss-80-12/8.6	75	100	145		306	296	280	266	249	**227**	200	153	3761	319
po-ss-80-13/8.6	75	100	145		332	320	302	288	270	**246**	216	165	3913	328
po-ss-80-14/8.6	90	125	172		353	341	322	306	286	**261**	229	175	4125	347
po-ss-80-15/8.6	90	125	172		376	365	343	327	305	**277**	246	188	4277	357
po-ss-80-16/8.6	110**	150	215		409	395	375	356	332	**302**	266	204	4630	543
po-ss-80-17/8.6	110**	150	215		436	422	397	380	355	**324**	284	217	4782	552
po-ss-80-18/8.6	110**	150	215		477	461	434	416	389	**358**	314	242	4955	561

* 6 inch motor
** 10 inch motor

subject to alterations

oddesse Pumpen- und Motorenfabrik GmbH • Am Pappelwald 12 • D-39387 Oschersleben - Made in Germany -
Phone: +49 (0) 3949 932 467 • Fax: +49 (0) 3949 932 463 • eMail: info@oddesse.de • http://www.oddesse.de

po-ss-100/8.6

2850 1/min - 50 Hz

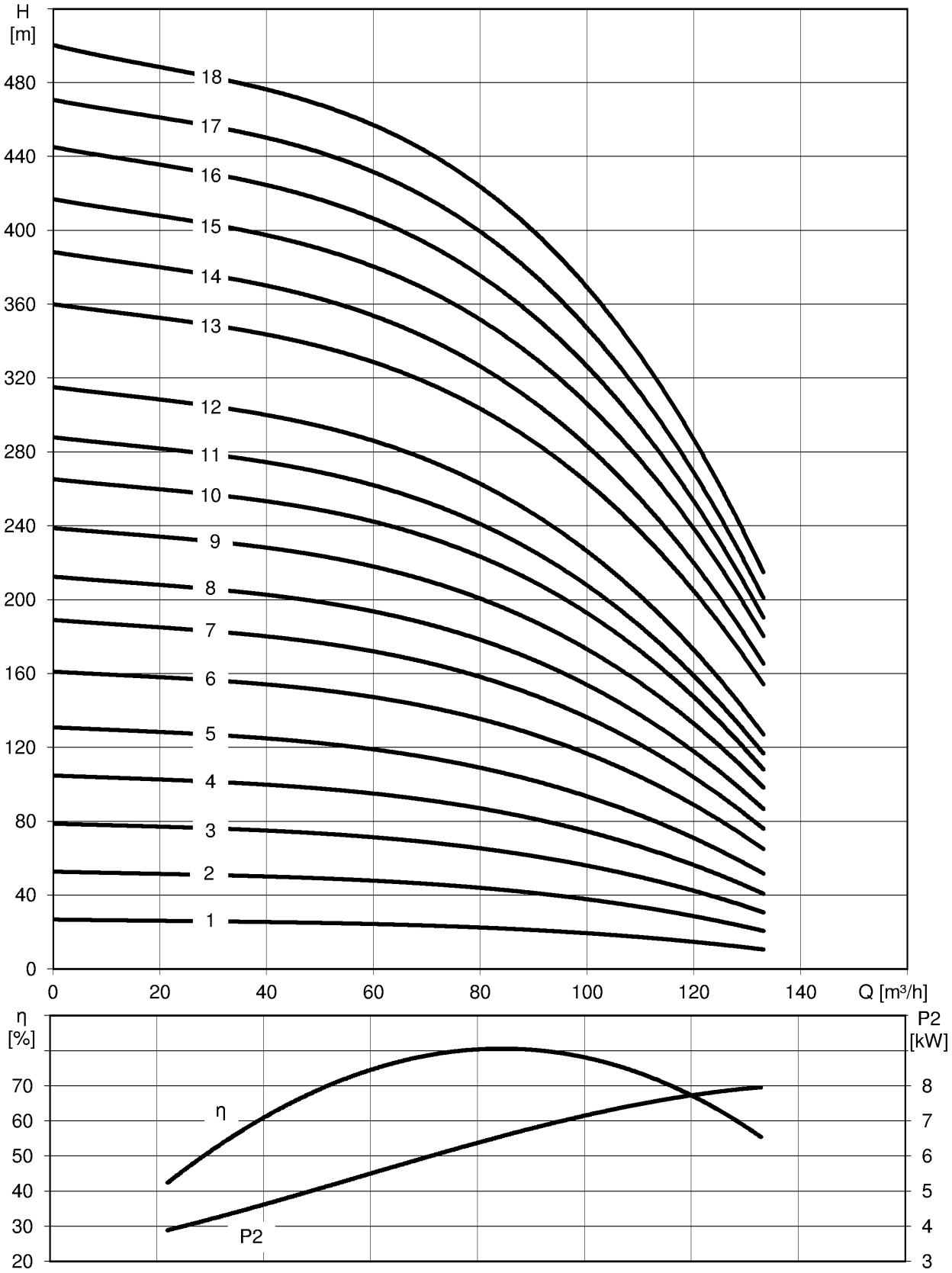

subject to alterations

oddesse Pumpen- und Motorenfabrik GmbH • Am Pappelwald 12 • D-39387 Oschersleben - Made in Germany -
Phone: +49 (0) 3949 932 467 • Fax: +49 (0) 3949 932 463 • eMail: info@oddesse.de • http://www.oddesse.de

po-ss-100/8.6

2850 1/min - 50 Hz

Type	Power		Amperes	Delivery rate Q										Length	Weight
			400V	[l/s]	6.1	11.1	16.7	22.2	**27.8**	30.6	33.3	36.9		l	m
	[kW]	[HP]	[A]	[m³/h]	22	40	60	80	**100**	110	120	133		[mm]	[kg]
po-ss-100- 1/8.6	9.2*	12.5*	17	**Delivery head H [m]**	26	26	24	22	**19**	18	15	11		1346	79
po-ss-100- 2/8.6	15*	20*	32		52	50	48	44	**38**	34	29	21		1668	105
po-ss-100- 3/8.6	26*	35*	57		77	75	72	65	**56**	50	42	31		2030	134
po-ss-100- 4/8.6	30*	40*	64		102	100	95	87	**75**	66	56	41		2292	152
po-ss-100- 5/8.6	37	50	72		128	125	119	109	**94**	83	71	52		2357	201
po-ss-100- 6/8.6	45	60	88		158	154	148	135	**117**	104	89	65		2589	223
po-ss-100- 7/8.6	55	75	108		185	180	172	158	**137**	121	104	76		2821	244
po-ss-100- 8/8.6	63	85	127		208	202	194	178	**154**	138	118	86		3053	266
po-ss-100- 9/8.6	75	100	145		234	228	218	200	**173**	155	133	98		3305	291
po-ss-100-10/8.6	75	100	145		259	254	242	224	**193**	172	147	108		3457	300
po-ss-100-11/8.6	90	125	172		282	274	262	241	**208**	186	158	117		3669	320
po-ss-100-12/8.6	90	125	172		307	301	286	262	**227**	202	172	127		3821	329
po-ss-100-13/8.6	110**	150**	215		352	344	328	304	**263**	237	205	154		4174	515
po-ss-100-14/8.6	110**	150**	215		380	370	354	325	**284**	255	220	165		4326	524
po-ss-100-15/8.6	130**	175**	250		407	397	381	352	**306**	274	240	180		4598	569
po-ss-100-16/8.6	130**	175**	250		435	425	406	375	**327**	293	254	190		4750	578
po-ss-100-17/8.6	130**	175**	290		462	450	431	398	**348**	312	270	200		4902	587
po-ss-100-18/8.6	150**	200**	290		489	475	457	424	**369**	333	286	215		5155	620

* 6 inch motor
** 10 inch motor

subject to alterations

oddesse Pumpen- und Motorenfabrik GmbH • Am Pappelwald 12 • D-39387 Oschersleben - Made in Germany -
Phone: +49 (0) 3949 932 467 • Fax: +49 (0) 3949 932 463 • eMail: info@oddesse.de • http://www.oddesse.de

po-ss-125/8.6

2850 1/min - 50 Hz

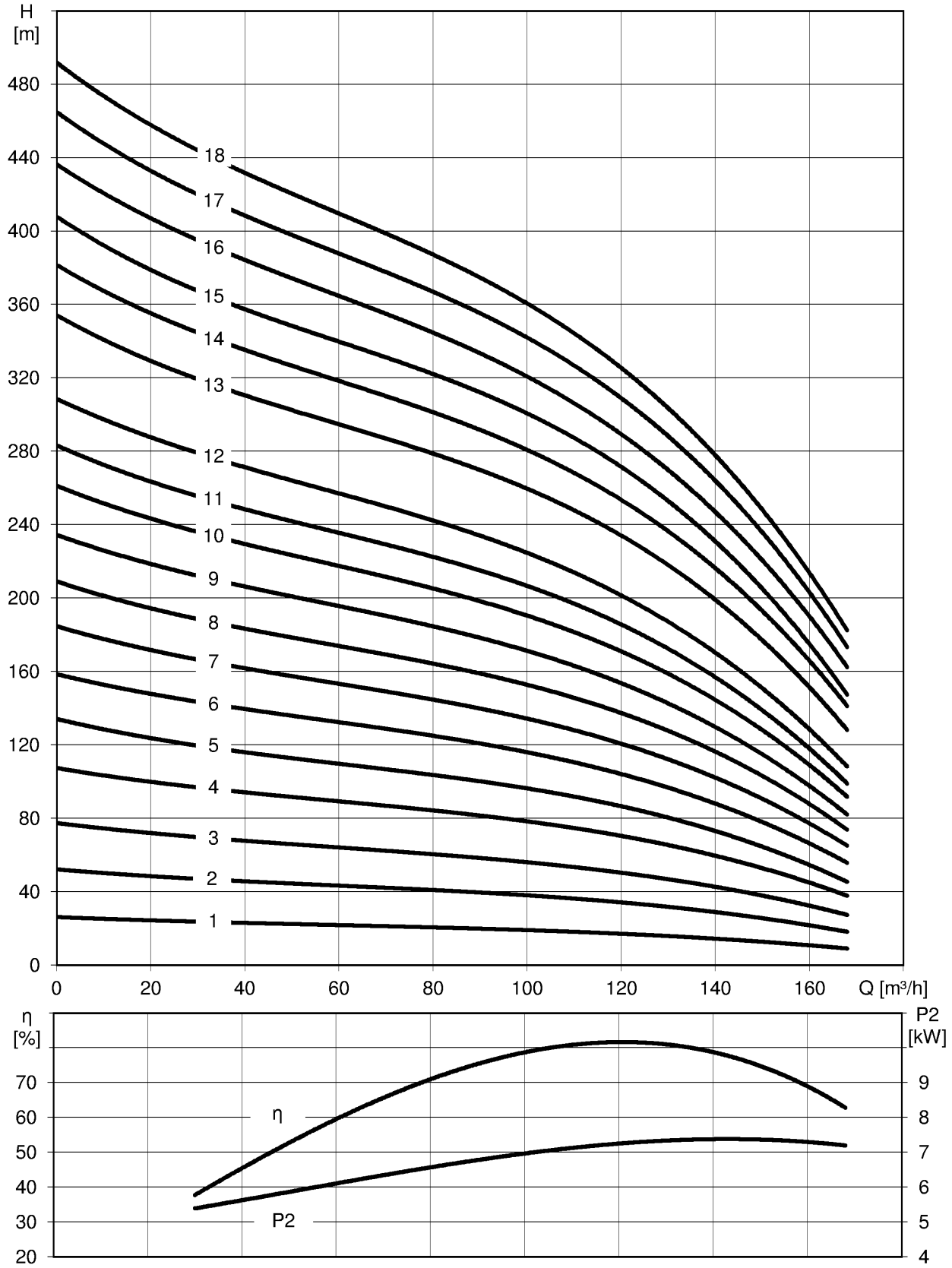

subject to alterations

oddesse Pumpen- und Motorenfabrik GmbH • Am Pappelwald 12 • D-39387 Oschersleben - Made in Germany -
Phone: +49 (0) 3949 932 467 • Fax: +49 (0) 3949 932 463 • eMail: info@oddesse.de • http://www.oddesse.de

po-ss-125/8.6

2850 1/min - 50 Hz

Type	Power		Amperes	Delivery rate Q									Length	Weight
			400V	[l/s]	8.3	13.9	19.4	27.8	**34.7**	37.5	41.7	46.7	l	m
	[kW]	[HP]	[A]	[m³/h]	30	50	70	100	**125**	135	150	168	[mm]	[kg]
po-ss-125- 1/8.6	7.5*	10*	17	**Delivery head H [m]**	24	22	21	19	**17**	15	13	9	1306	75
po-ss-125- 2/8.6	15*	20*	32		48	45	42	38	**33**	31	26	18	1668	105
po-ss-125- 3/8.6	26*	35*	57		70	66	62	56	**48**	45	39	27	2030	134
po-ss-125- 4/8.6	37	50	72		98	92	86	78	**67**	64	54	37	2205	192
po-ss-125- 5/8.6	37	50	72		120	113	107	95	**84**	78	65	45	2357	201
po-ss-125- 6/8.6	45	60	88		145	136	128	115	**101**	93	79	55	2589	223
po-ss-125- 7/8.6	55	75	108		168	158	148	133	**117**	108	92	64	2821	244
po-ss-125- 8/8.6	63	85	127		191	179	168	151	**133**	124	104	73	3053	266
po-ss-125- 9/8.6	75	100	145		214	201	189	170	**149**	137	116	81	3305	291
po-ss-125-10/8.6	75	100	145		238	224	210	189	**165**	153	130	90	3457	300
po-ss-125-11/8.6	90	125	172		259	242	228	204	**180**	166	141	97	3669	320
po-ss-125-12/8.6	90	125	172		282	264	248	223	**195**	180	153	107	3821	329
po-ss-125-13/8.6	110**	150**	215		322	303	285	258	**225**	211	180	126	4195	515
po-ss-125-14/8.6	110**	150**	215		348	328	307	278	**245**	230	195	139	4347	524
po-ss-125-15/8.6	130**	175**	250		372	348	330	296	**263**	244	210	144	4619	569
po-ss-125-16/8.6	130**	175**	250		398	375	353	318	**280**	260	224	160	4771	578
po-ss-125-17/8.6	150**	200**	290		424	399	375	338	**298**	280	240	170	5003	611
po-ss-125-18/8.6	150**	200**	290		448	422	395	357	**315**	295	250	180	5155	620

* 6 inch motor
** 10 inch motor

subject to alterations

oddesse Pumpen- und Motorenfabrik GmbH • Am Pappelwald 12 • D-39387 Oschersleben - Made in Germany -
Phone: +49 (0) 3949 932 467 • Fax: +49 (0) 3949 932 463 • eMail: info@oddesse.de • http://www.oddesse.de

Specification

- multistage centrifugal pump in structured design coupled with **oddesse** submersible motor
- discharge end with integrated non-return valve
- driven by three-phase AC motors
- minimal water level above the pump unit 2 m
- min. cooling flow 0.5 m/s, max. ambient temperature 30 °C (higher temperature on request)
- pure, clean water with content of solid up to 70 mg/l
- standard connection: R = G5
- pipe thread according to DIN ISO 228 part 1 / other connections on request
- hydraulic performance tests for acceptance according to DIN EN ISO 9906 class 2
- special design (Horizontal installation, etc.) on request

Main dimensions

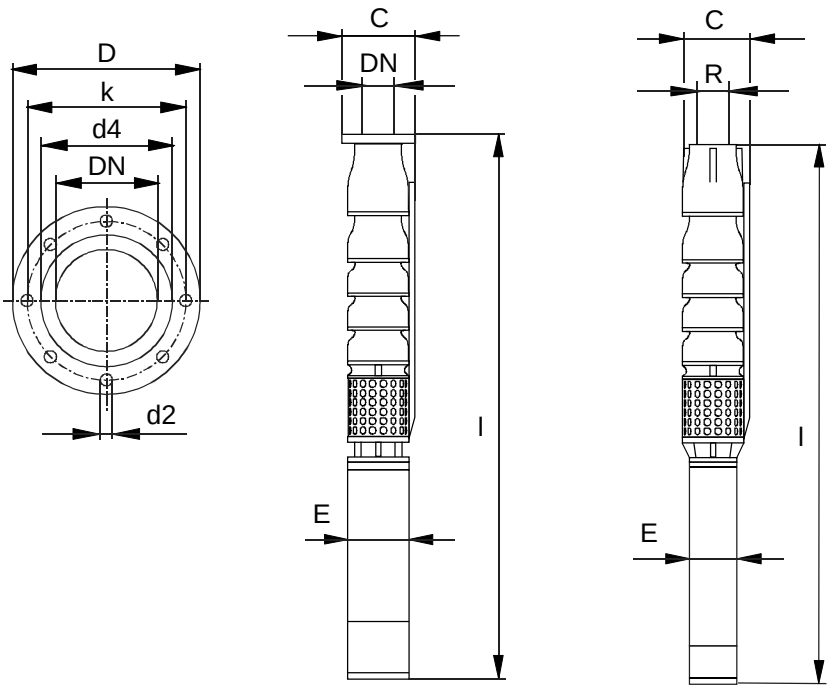

C = 198 mm for 1 cable
C = 206 mm for 2 cables
C = flange see table below

E = 141 mm for po-mo6
E = 181 mm for po-mo8

Dimensions of adapters

Type	reduction thread	adapters						
		flange	dimensions					
			D [mm]	b [mm]	k [mm]	d4 [mm]	d2 [mm]	m [kg]
po-ss-110/8.7 po-ss-140/8.7	G4 G6	DN80, PN16	200	20	160	138	8× ø18	4.7
		DN80, PN40	200	24	160	138	8× ø18	5.7
		DN100, PN16	220	20	180	158	8× ø18	6.1
		DN100, PN40	235	24	190	162	8× ø22	8.0
		DN125, PN16	250	22	210	188	8× ø18	8.2
		DN125, PN40	270	26	220	188	8× ø26	11.0
		DN150, PN16	285	22	240	212	8× ø22	18.0

Flange dimensions according to DIN 2633 (PN16) and DIN 2635 (PN40)
Material: stainless steel
PN nominal pressure [bar], DN nominal diameter [mm], b thickness of flange [mm], m weight [kg]
Flanges with 2 cable recesses

subject to alterations

oddesse Pumpen- und Motorenfabrik GmbH • Am Pappelwald 12 • D-39387 Oschersleben - Made in Germany -
Phone: +49 (0) 3949 932 467 • Fax: +49 (0) 3949 932 463 • eMail: info@oddesse.de • http://www.oddesse.de

Material of construction (hydraulic parts in casted design)

Submersible motor pumps po-ss/8.7

According to DIN

components	N-version (AISI 316)
impeller	stainless steel / 1.4401
spacer sleeve	stainless steel / 1.4401
stage casing, diffuser	stainless steel / 1.4401
wear ring	POM
suction casing, outlet branch	stainless steel / 1.4401
radial bearing	PTFE / stainless steel
suction strainer	stainless steel / 1.4401
coupling	stainless steel / 1.4462
shaft	stainless steel / 1.4462
screws, nuts and bolts	stainless steel / 1.4401
motor	see chapter submersible motors

According to AISI

components	N-version (AISI 316)
impeller	stainless steel / AISI 316
spacer sleeve	stainless steel / AISI 316
stage casing, diffuser	stainless steel / AISI 316
wear ring	POM
suction casing, outlet branch	stainless steel / AISI 316
radial bearing	PTFE / stainless steel
suction strainer	stainless steel / AISI 316
coupling	stainless steel / AISI 329
shaft	stainless steel / AISI 329
screws, nuts and bolts	stainless steel / AISI 316
motor	see chapter submersible motors

oddesse reserve the right to employ construction materials following German (DIN) standard

subject to alterations

po-ss-110/8.7

2850 1/min - 50 Hz

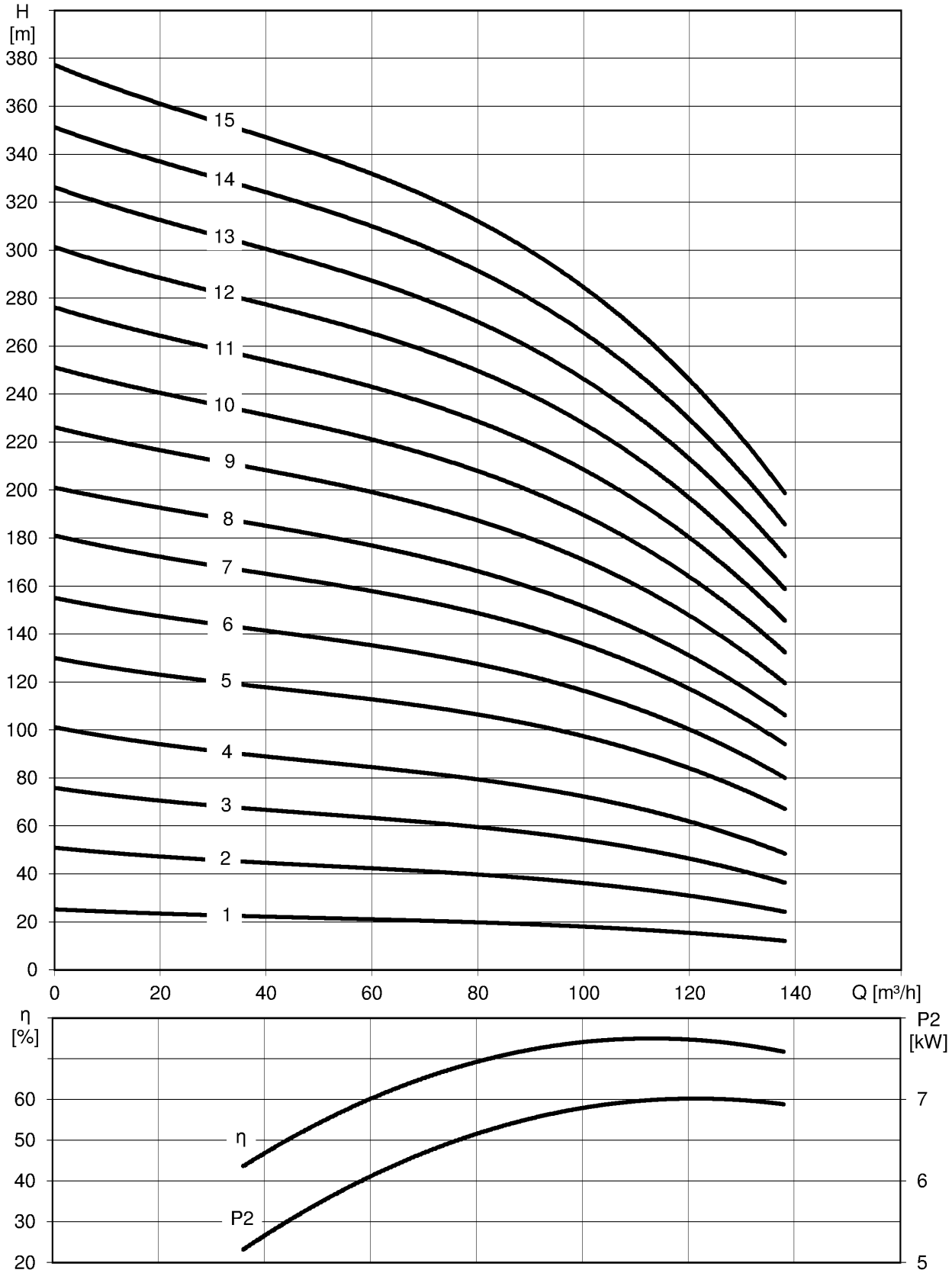

subject to alterations

po-ss-110/8.7

2850 1/min - 50 Hz

Type	Power		Amperes	Delivery rate Q									Length	Weight
			400V	[l/s]	10	18	23	27	**31**	33	35	38	l	m
	[kW]	[HP]	[A]	[m³/h]	36	66	84	96	**110**	120	126	138	[mm]	[kg]
po-ss-110- 1/8.7	7.5*	10*	17	Delivery head H [m]	23	21	20	19	**17**	16	15	12	1301	79
po-ss-110- 2/8.7	15*	20*	32		45	42	39	37	**34**	31	29	24	1668	112
po-ss-110- 3/8.7	22	30	45		68	62	59	56	**51**	47	44	36	1878	163
po-ss-110- 4/8.7	30	40	58		90	83	78	74	**68**	62	58	48	2130	190
po-ss-110- 5/8.7	37	50	72		119	111	105	99	**92**	84	79	67	2372	217
po-ss-110- 6/8.7	45	60	88		143	133	125	119	**110**	100	94	80	2609	243
po-ss-110- 7/8.7	55	75	108		167	155	146	139	**128**	117	110	94	2846	267
po-ss-110- 8/8.7	63	85	127		187	174	163	155	**142**	132	123	106	3083	292
po-ss-110- 9/8.7	75	100	145		211	195	184	175	**160**	149	139	119	3340	320
po-ss-110-10/8.7	75	100	145		234	217	204	194	**178**	165	154	132	3497	333
po-ss-110-11/8.7	90	125	172		257	239	224	213	**196**	182	169	145	3714	355
po-ss-110-12/8.7	90	125	172		281	260	245	233	**214**	198	185	158	3871	367
po-ss-110-138.7	110	150	225		304	282	265	252	**231**	215	200	172	4078	387
po-ss-110-14/8.7	110	150	225		328	304	286	272	**249**	231	216	185	4235	399
po-ss-110-15/8.7	132	175	292		351	326	306	291	**267**	248	231	198	4492	427

* 6 inch motor

subject to alterations

oddesse Pumpen- und Motorenfabrik GmbH • Am Pappelwald 12 • D-39387 Oschersleben - Made in Germany -
Phone: +49 (0) 3949 932 467 • Fax: +49 (0) 3949 932 463 • eMail: info@oddesse.de • http://www.oddesse.de

po-ss-140/8.7

2850 1/min - 50 Hz

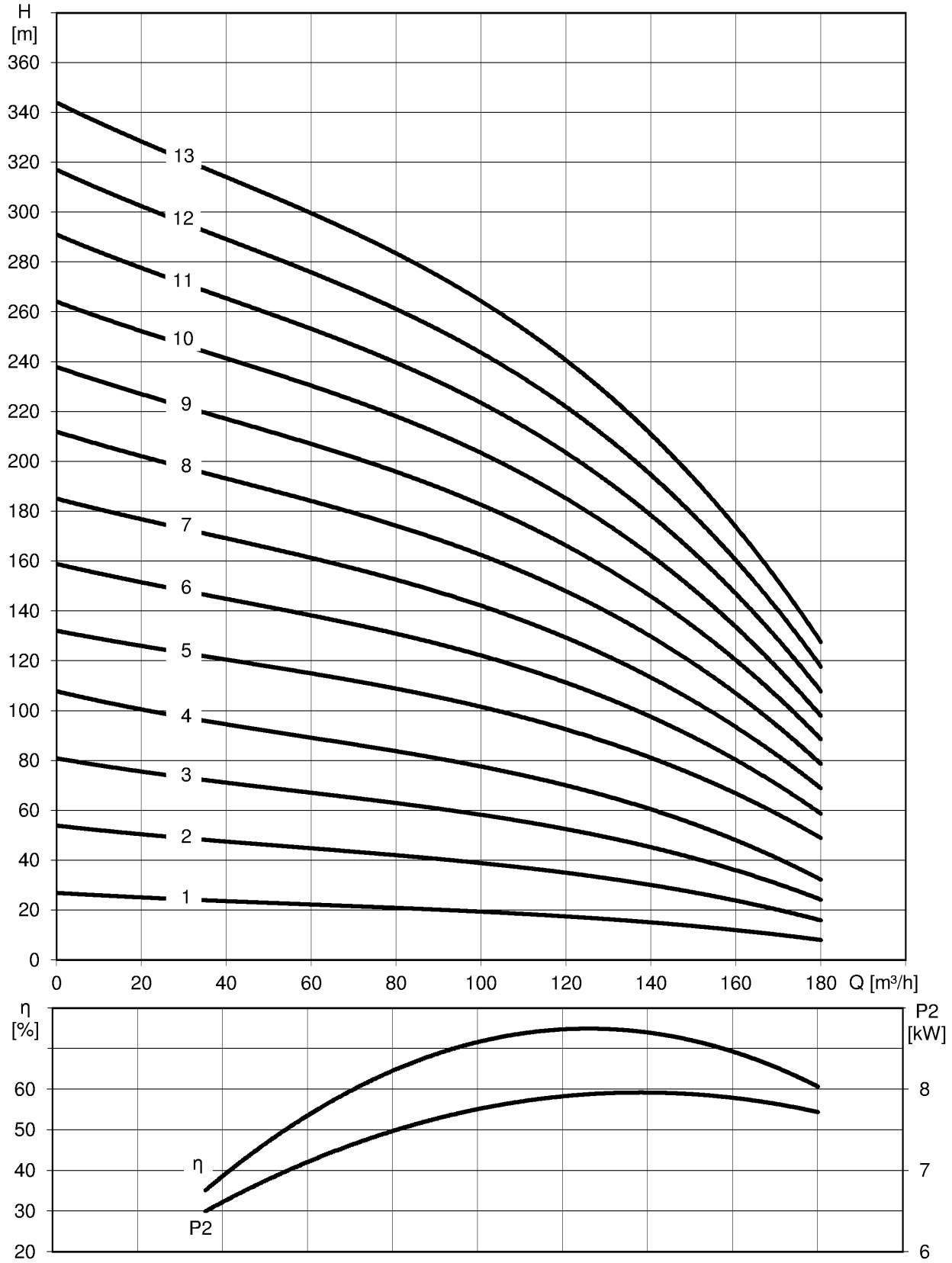

subject to alterations

po-ss-140/8.7

2850 1/min - 50 Hz

Type	Power		Amperes	Delivery rate Q									Length	Weight
			400V	[l/s]	10	20	27	33	**39**	43	47	50	l	m
	[kW]	[HP]	[A]	[m³/h]	36	72	96	120	**140**	156	168	180	[mm]	[kg]
po-ss-140- 1/8.7	9.2*	12.5*	21	**Delivery head H [m]**	24	21	20	18	**15**	13	10	8	1341	83
po-ss-140- 2/8.7	18.5*	25*	40		48	43	40	35	**30**	25	21	16	1733	119
po-ss-140- 3/8.7	30	40	58		72	64	60	53	**45**	38	31	25	1973	178
po-ss-140- 4/8.7	37	50	72		95	86	80	71	**60**	50	42	33	2215	204
po-ss-140- 5/8.7	45	60	88		122	111	103	93	**81**	70	60	49	2452	230
po-ss-140- 6/8.7	55	75	108		146	134	124	112	**97**	84	72	59	2689	255
po-ss-140- 7/8.7	63	85	127		171	156	144	130	**113**	98	84	69	2926	280
po-ss-140- 8/8.7	75	100	145		195	178	165	149	**129**	112	96	79	3183	308
po-ss-140- 9/8.7	90	125	172		219	200	186	167	**145**	126	108	89	3400	330
po-ss-140-10/8.7	90	125	172		244	223	206	186	**162**	140	120	98	3557	343
po-ss-140-11/8.7	110	150	225		268	245	227	204	**178**	154	132	108	3764	363
po-ss-140-12/8.7	110	150	225		292	267	247	223	**194**	168	144	118	3921	375
po-ss-140-13/8.7	132	175	292		317	290	268	242	**210**	182	156	128	4178	402

* 6 inch motor

subject to alterations

oddesse Pumpen- und Motorenfabrik GmbH • Am Pappelwald 12 • D-39387 Oschersleben - Made in Germany -
Phone: +49 (0) 3949 932 467 • Fax: +49 (0) 3949 932 463 • eMail: info@oddesse.de • http://www.oddesse.de