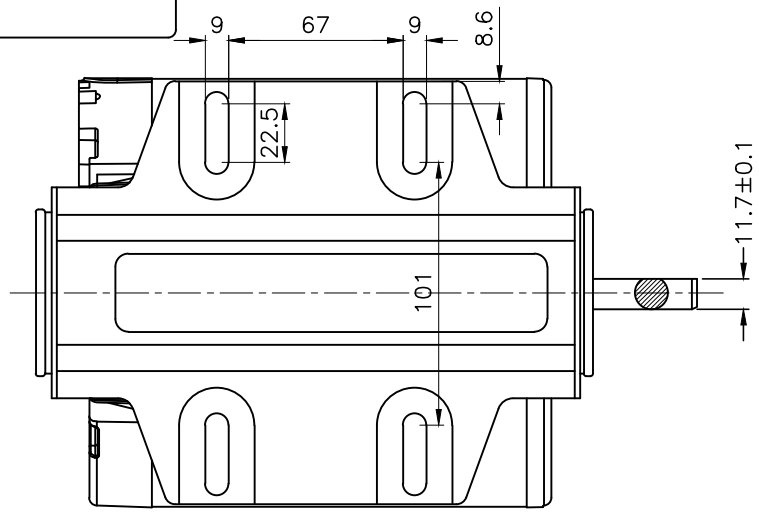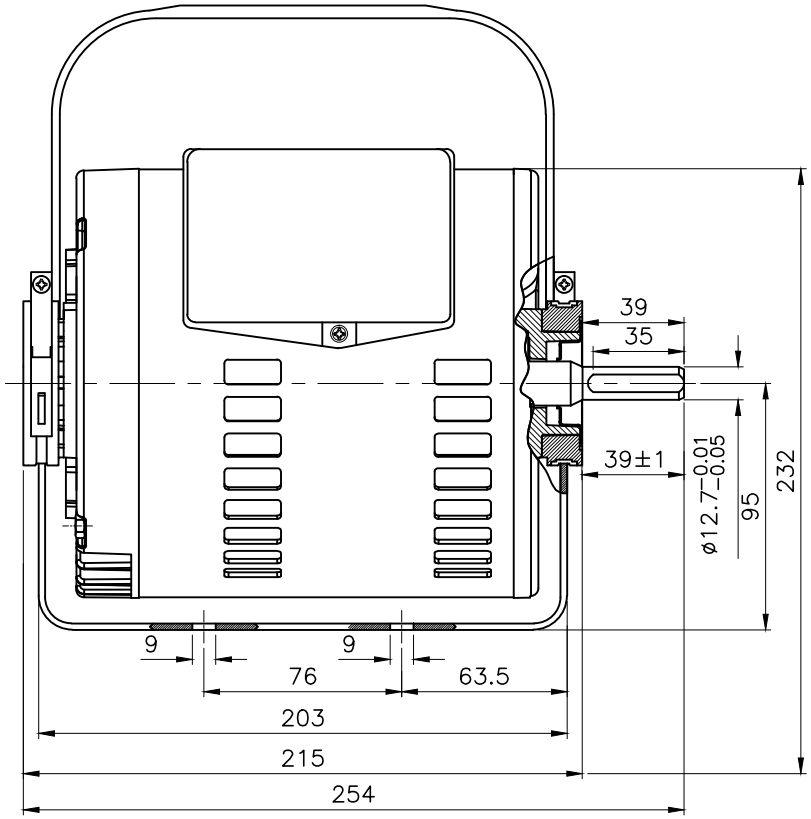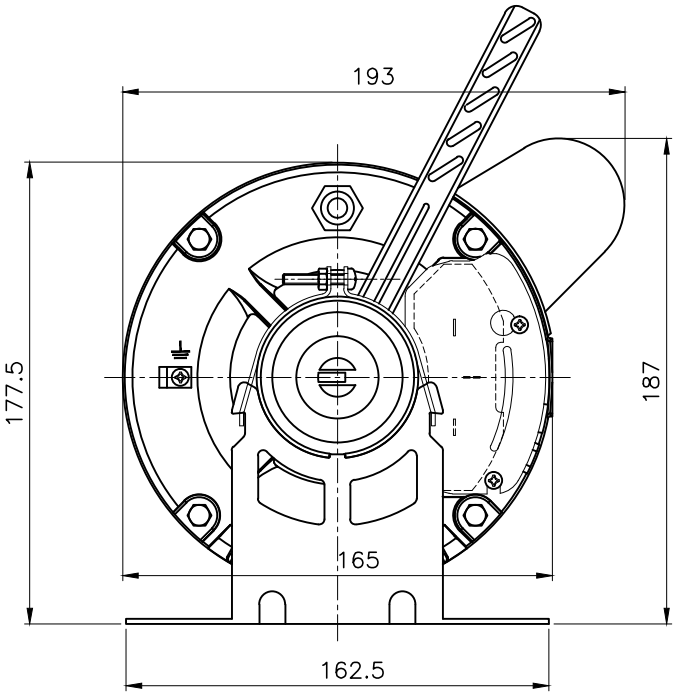Evaporative Cooler Motors
Split Phase 3/4HP