Fan Motors 5,10,16W

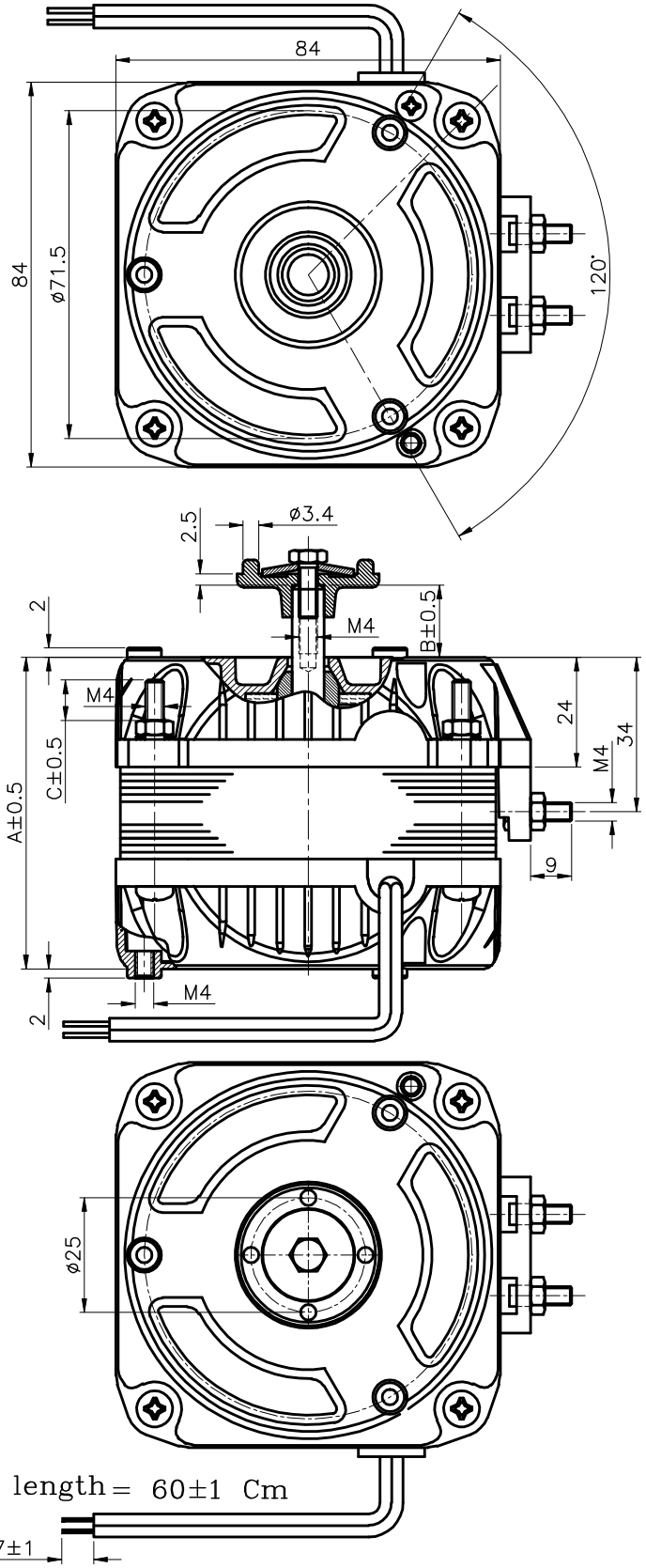

Output Power	5W	10W	16W
A	60	68	73
B	13.5	15.5	18.5
C	7	9	9