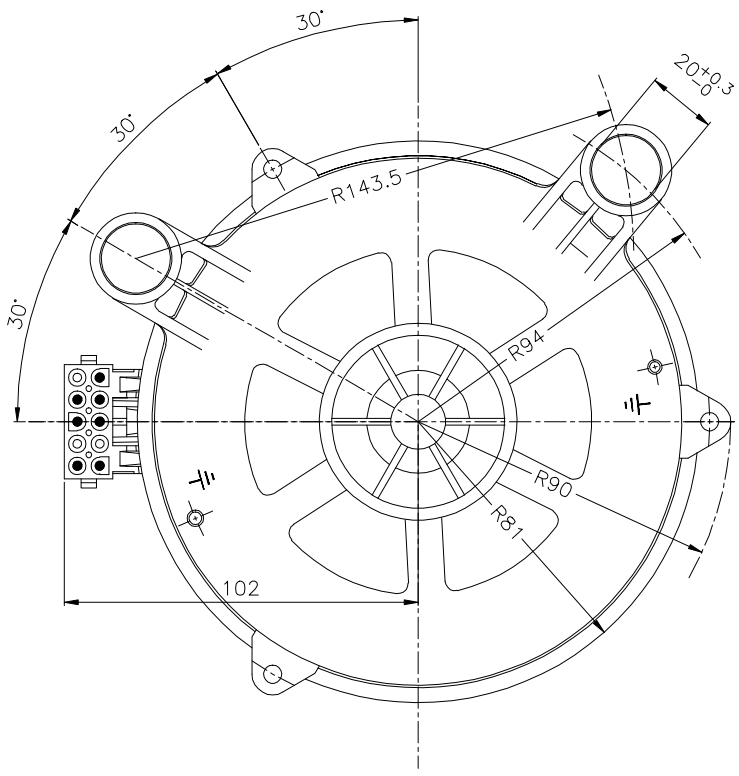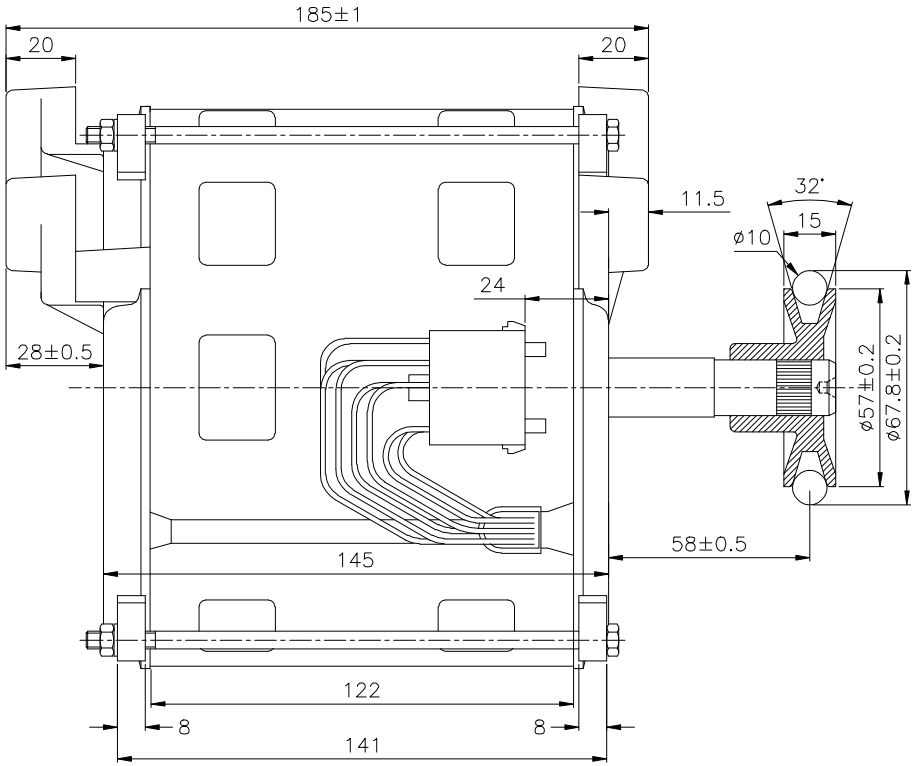Washing Machine Motors